MESSRS: DALIAN COSCO KHI SHIP ENGINEERING CO.,LTD.

SHIP NO. DE014

6EY22ALW × 1120kW

MAIN DIESEL GENERATOR ENGINE

FINAL DRAWINGS

DATE : 4th, Apr., 2014

YANMAR CO.,LTD.

LARGE POWER PRODUCTS OPERATIONS DIVISION

DEVELOPMENT DEPT. ENGINEERING DEPT.

RULE : LR-UMS

QUANTITY: 3 SETS / VESSEL

WORK NO. :R3-B18601

CONTENTS

W. NO: R3-B18601

	NAME	REMARKS
----------	SPECIFICATIONS	
B3-50633-2140	OUTLINE	
P3-50633-1400	PIPING LAYOUT (EXH. & AIR)	
P3-50633-2660	PIPING LAYOUT (COOLING WATER)	
Y4-00004-2240	JACKET COOLING WATER PRE-HEATING SYSTEM DIAGRAM	
P3-50633-2670	PIPING LAYOUT (LUB. OIL)	
---------	LUB. OIL PURIFICATION SYSTEM	
P3-50633-0090	PIPING LAYOUT (FUEL OIL)	
---------	FUEL OIL SUPPLYING SYSTEM	
E3-50633-0770	CONNECTION DIAGRAM (1/4-4/4)	
E3-00000-7020	CONNECTION DIAGRAM FOR UG-25^{+} GOVERNOR	
Y4-00008-2191	THE REQUEST & COSIDERATION FOR MAIN SWITCHBOARD OR MONITOR SIDE	FOR REFERENCE
J4-50633-0120	CLEANING DEVICE OF TURBINE	
1309-052	D/G CONTROL & LO PRIMING PUMP PANEL	ENG. MOUNTING
B3-00003-440A	LUB. OIL PRIMING PUMP △11/19	ENG. MOUNTING
B4-00004-4230	AUTO-FRESH WATER VALVE	
J4-00000-0054	SETTING OF THE EXPANSION JOINT	FOR REFERENCE
B4-00001-0980	EXPANSION JOINT FOR EXHAUST GAS 350A	FOR T/C OUTLET
B4-00004-5820	SCREW-DOWN CHECK GLOBE VALVE FOR HOT WATER INLET	
1B3C697	SILENCER 350A	
B3-00005-072I	NOZZLE TESTER	
D3-50633-0390	THE CALCULATION OF HEAT BALANCE	
~~D3-50633-0720~~	~~THE CALCULATION OF TORSIONAL VIBRATION (1/3-3/3)~~	
T3-50633-1008	THE REPORT OF TORSIONAL VIBRATION	
	*** SPARE PARTS & TOOLS ***	
---------	LIST OF SPARE PARTS	1 SET/SHIP
C3-50633-0044	LIST OF TOOLS (1/7-7/7)	1 SET/SHIP
---------	LIST OF SPECIAL TOOLS	1 SET/SHIP
C3-46673-0451	LIST OF HYDRAULIC PUMP (1/2-2/2)	1 SET/SHIP
C3-50633-0020	LIST OF HYDRAULIC JACK (1/2-2/2)	1 SET/SHIP
C3-50633-0030	LIST OF TOOLS FOR AIR COOLER	1 SET/SHIP
C3-00000-9241	LIST OF SPARE PARTS FOR TURBO-CHARGER (1/4-4/4)	1 SET/SHIP
C3-00000-9180	LIST OF SPARE PARTS FOR LUB. OIL AUT. BACK-FLUSHING FILTER	1 SET/SHIP
C3-00000-9110	LIST OF SPECIAL TOOL FOR LUB. OIL AUT. BACK-FLUSHING FILTER	1 SET/SHIP
C3-00000-9101	LIST OF SPARE PARTS FOR LUB. OIL PRIMING PUMP (1/2-2/2)	1 SET/SHIP

FOR CONFERENCE		SALES DEPT	1		DESIGNER	Y. MORIKAWA
FOR SPECIFICATION	弓	COPY	1		CHECKED	K. Ishikawa
FOR INSTALLATION	弓	TOTAL	9		SPECIALIST	
FINAL DRAWINGS	7	SPARE PART (IZE)			MANAGER	K. [illegible]

SPECIFICATIONS FOR DIESEL GENERATOR ENGINE

SHIP OWNER	
SHIP YARD	DALIAN COSCO KHI SHIP ENGINEERING CO.,LTD.
SHIP NUMBER	DE014
A KIND OF SHIP	
NAVIGATION OF AREA	OCEAN GOING
USE	MAIN GENERATOR DIESEL ENGINE
RULE	LR-UMS
QUANTITY	3 SETS / VESSEL

1. PRINCIPAL DATA OF DIESEL ENGINE

Type	Vertical,Single Action,4-Cycle,Direct Injection, Water Cooled Diesel Engine with Turbo-charger and Air Cooler
Model	6EY22ALW
Rated Output/Revolution	1300 kW ／ 900 min^{-1}
No. of Cylinder	6 (In-Line)
Cylinder Bore / Stroke	220 mm / 320 mm
Mean Effective Press.	2.375 MPa
Mean Piston Speed	9.60 m／s
Max. Combustion Press.	20.0 MPa
Over Load	10% Over Load : 60min. (Every 12 hours)
Direction of Rotation	Counter clock wise (as viewed from Flywheel Side)
Firing Order	1-4-2-6-3-5-1 (Interval : 120°) ⑥⑤④③②① Flywheel Side
Starting & Stopping System	•Remote(Auto)Starting/Stopping with Manual Starting/Stopping •Start. Method : Air Motor Starting with Press. Reducing Valve at Inlet Port of Air Motor Max. Start. Press. 2.94 MPa •Stop. Method : Control Air of 0.64～1.0MPa and Electric (DC24V)Operation
Fuel Oil	•Heavy Fuel Oil (700 cSt at 50℃) The Viscosity must be kept in range 11～14 cSt at Eng. inlet continuous running with Gen.load< 20% is to be within 3 hours •Marine Gas Oil, Marine Diesel Oil(DMA,DMZ,DMB) The Viscosity must be kept more than 1.8 cSt at Eng. inlet continuous running & Emergency & Low load. Note: The jacket water temp. of stand-by engine must be kept from 65 to 70℃ by pre-heating. In case of jacket water temp. is lower than 65℃ by any trouble of pre-heating unit etc, changeover the fuel oil from H.F.O. to M.D.O. in stand-by engine.
Lubricating Oil System	•System Oil •Oil Sump : Built in Common Bed of D/G set •Forced Lubrication by the Engine driven Gear Pump •Kind of Lub. oil : A.P.I. Service Grade CD Viscosity : SAE No. 30 or 40 T.B.N. : 30～42 •Turbo-Charger Oil : Branch Supply from System Oil •Rocker Arm Oil : Branch Supply from System Oil •Governor Hydraulic Oil : Same kind of System Oil
Cooling System	•Forced Cooling Cylinder & Cylinder head : Fresh Water(High Temp.) Lub.Oil Cooler & Air Cooler : Fresh Water(Low Temp.) Piston : Lub. Oil
Turning System	Ratchet type

Specific Fuel Oil consumption	191 +5%g/kW•h with Eng. driven LO Pump and C.W. Pump 1 set) 187 +5%g/kW•h without Engine driven Pump. •At Eng. Rated Output 1300 kW / 900 min^{-1} Marine Diesel Oil used and Low Calorific Value of 42.7 MJ/kg •Based on the Standard Reference Conditions of ISO 3046/1. •NOx Level to meet IMO Exhaust Gas Regulation Tier II (D2 Mode) (Max 9.2 g/kW•h)
Specific Lub. Oil consumption	0.3～1.1 g/kW•h At eng. full load
Governor Characteristics At Load Variation of 100%→0%→34%→67%→100%	Speed Variation: Momentary ≦ 10% ,Permanent ≦ 5% Time of Stability within 1% of Final steady speed ≦ 5 sec.
Usage Condition Note:In case engine room temp. is lower than 5℃, the preheating system etc. before starting the engine is necessary to raise jacket water temp. higher than 5℃.	•Ambient Temperature ; 0～45℃ •Relative Humidity ; ～85% •LT F.W. Temp. at cooler inlet ; ～36℃ (Low Temp.) •HT F.W. Temp. at Eng. jacket outlet ; 85℃ (High Temp.) •HT F.W. Press. at Eng. jacket inlet ; 0.15～0.50MPa (at HT F.W. Pump outlet) •Exh. Gas Back Press. at Full Load ; below 3.43 kPa (below 350mmH_2O) Exhaust Gas Volume : 7540 Nm^3/h at Full Load Exhaust Gas Temp. of T/C Outlet: 370 ℃ at Full Load •Combustion Air Volume(25℃); 8000 m^3/h at Full Load
Capacity of Lub. oil & Water	Fresh Water(Eng.jacket & piping): 190 liters System Oil (Eng.+Common bed tank) : 50 + 1200 liters Governor Hydraulic Oil : 2.0 liters

2. PRINCIPAL DATA OF A. C. GENERATOR

Rated Output / Revolution	1120 kW / 900 min^{-1}
Rated Voltage / Current	AC450V /1796 A
No. of Phase / Frequency	3 ϕ / 60 Hz
Power Factor	0.8
Insulation	Class F
Enclosure / Cooling	Drip-Proof / Self-ventilating
Type of Bearing / Lubrication	Single / Self-Lubrication
Coupling of Eng. and Gen.	Rigid
Manufacture	TAIYO ELECTRIC CO., LTD.
Remark : 1. This AC Generator is supplied by YANMAR. 2. Please refer to document of gen. maker.	

3. MATERIAL & STRUCTURE OF ENGINE

Parts Name	Material	Structure
Cylinder Block	Cast iron	Monoblock casting and having underslung main bearing cap. The air duct, cooling water and lub. oil passages are integrated in block.
Cylinder Liner	Special cast iron	Wet type
Cylinder Head	Cast iron	Fuel injection valve in center, indicator valve on head cover. 4-valve type consisting of 2 suction valves and 2 exh.valves Exh. valve seat rings and nozzle sleeve are cooled by F.W. Exhaust valves are made of Nimonic
Piston	Special cast iron	Mono-block casting, forced cooled type. The top and third ring grooves (upside) and second ring grooves are hardened with laser hardening process. The top ring grooves (downside) is hardened with laser alloying process.

Piston Pin	Special steel	Floating type
Connecting Rod	Forged steel	Structure fitted with piston pin metal made of leaded bronze of steel back metal at the small end and processed with serration at matching faces of the large end.
Main Metal & Crankpin Metal	Aluminum Alloy	Bearing by aluminum alloy with steel back metal (Pb Free)
Crankshaft	Forged steel	Monoblock forging and bearing parts are treated with induction hardening and polishing finish.
Camshaft	Forged steel	2 split type, monoblock forging of cam and shaft.
Common bed	Carbon steel	Welding structure. and making use of lub. oil sump.

4. ACCESSORIES OF ENGINE

Marks in column
Supply M : Maker(YANMAR) S : Shipyard O : Owner
Location E : Engine side H : Hull side

4-1. Lub. Oil System

Parts Name	Q'ty /Eng.	Supply	Location	Specifications
Lub. Oil Pump	1	M	E	Type : Gear Pump with Safety Valve (0.8MPa) Capacity : 32.7 m^3/h
Lub. Oil Strainer for Pump inlet	1	M	E	Type: Punch Holes Plate
Lub. Oil Strainer for Engine inlet	1	M	E	Type: Automatic Back Washing (B&K) Filtration Limit : E.F. 20 μm
Lub. Oil Cooler	1	M	E	Type:Finned Multitubular, Cooling Area : 17.0 m^2
Lub. Oil Auto-Temp. Control Valve	1	M	E	Type:Wax Element, Direct Acting Setting Temp. : 50～65℃ at Eng. inlet
Lub. Oil Press. Regulating Valve	1	M	E	Type : Spring Loading Setting : 0.55～0.60MPa
Lubricating Oil Purifier (Exclusive use for D/G)		S	H	For Continuous Purification
Note : The purification system has equipments that satisfies maker's requirement as the attached document.				
Over Flow Tank for Purification of Lub. Oil		S	H	
Pipe Connections of Sump Tank	each 1	M	E	Lub. Oil Inlet:40A, Lub. Oil Outlet:40A Over Flow for continuous cleaning : 65A
By-pass Filter	1	M	E	Type: Centrifugal Filter
Lub. Oil Priming Motor Pump	1	M	E	Capacity : 5.0 m^3/h x 0.15MPa Electric Motor 1.5kW,3 ϕ -AC440V,60Hz
•Lub. oil priming pump is to be run at all times durning engine stop for protection of main bearing				
Priming Pump Starter (mounted on engine)	1	M	E	Priming pump start & stop is controlled by eng. running signal from engine control circuit or manual

4-2. Cooling Water System

Parts Name	Q'ty /Eng.	Supply	Location	Specifications
H.Temp. F.W. Pump for Jacket Water	1	M	E	Type : Centrifugal Pump Capacity : 40 m^3/h x 25 m
L.Temp. F.W. Pump for Cooler		S	H	Capacity : 49.8 m^3/h Refer to Heat Balance Note; Inlet press. to be less than 0.25MPa
Fresh Water Cooler		S	H	
H.Temp.F.W. Auto-Temp.Control Valve	1	M	E	Type : Wax Element, Direct Acting Setting Temp. : 85±4℃ at Eng. outlet
L.Temp. F.W. Auto-Temp. Control Valve		S	H	Setting Temp. : 36℃ at Eng. inlet

Orifice Plate for Jacket Water	1	M	E	For Adjusting Press. of Jacket Cooling Water Press.
Air Escape Outlet for Jacket Water	1	M	E	JIS 5k-15A with orifice plate
Hot Water Inlet & Outlet for Pre-heating	1	M	E	JIS 5k-15A with orifice plate and check globe valve
Auto-Fresh Water Valve at Cooler Water Inlet	1	M	H	Open & Shut is Operated by Lub. Oil Press. of Eng.
Pre-heating Unit	1/ Ship	M*	H	Note: The jacket water temp. of stand-by engine must be kept from 65 to 70℃ by pre-heating.

4-3. Fuel Oil System

Parts Name	Q'ty /Eng.	Supply	Loca-tion	Specifications
M.D.O. Motor Pump		S	H	Capacity : abt. 2.77 m^3/h for 3 engines running
Final F.O. Filter	1	M	E	Double Throw Wire Net Mesh with Lagging Filtration Limit : E.F. 25 μ m
F.O. Injection Pump	6	M	E	
F.O.Injection Valve	6	M	E	
F.O. High Press. Pipe	6	M	E	With Fuel Leakage line
Leak Detector for High Press. Pipe	1	M	E	Abnormal OFF at High Level of Leak Tank
F.O. Drain Sump	1	M	E	
F.O. Pump Case Cover	1	M	E	
Press. Regulating Valve for F.O. Return	1	M	E	Type: Spring Loading & Differential press. Control Press. Set. at Running : 0.70～0.80MPa (Diff. Press. : 0.30～0.35MPa+Back Press.)
H.F.O. Booster Pump & Press. Regulating Valve		S	H	Capacity : abt. 1.11 m3/h for 3 engines running Press. Regulating : 0.40～0.45MPa
H.F.O. Circurating Pump		S	H	Capacity : abt. 2.77 m3/h for 3 engines running
H.F.O. Filter for Circurating Line		S	H	Recommended : Automatic Back Washing Filter Filtration Limit : E..F. 10 μ m
H.F.O. Heater		S	H	
Press. Regulat. Valve for H.F.O. Circulating Line		S	H	Press. Regulating : 0.85MPa
Press. Regulat. Valve for M.D.O. Circulating Line		S	H	Press. Regulating : 0.85MPa
Changeover Valve of M.D.O. & H.F.O.		S	H	
Press. Regulating Valve for M.D.O. Return Line		S	H	Press. Regulating : 0.40～0.45MPa
M.D.O. Backup Pump		M*	H	Air Driven Type with Control Air Unit

4-4. Suction & Exhaust System

Parts Name	Q'ty /Eng.	Supply	Location	Specifications
Exhaust Gas Turbo-charger	1	M	E	Model : A135 Air Cooled Type (Anti-Flywheel Side)
Air Cooler	1	M	E	Type: Finned Multitubular Cooling Area : High Temp. side :15.3m² Low Temp. side :30.5m²
Expansion Joint of Exhaust Gas Outlet	1	M	E	Bellow Type for Turbo-charger Outlet Size : 350A
Water Washing of Blower for T/C	1/ Ship	M	H	Provided as a tool
Water Washing of Nozzle for T/C	1/ Ship	M	H	Provided as a tool
Silencer	1	M	H	Non-Sparkarrester type Size : 350A

4-5. Governing Device

Parts Name	Q'ty /Eng.	Supply	Location	Specifications
Governor	1	M	E	Woodword Model : UG-25+ Microprocessor Controlled Mechanical Hydraulic Governor

4-6. Starting Air System

Parts Name	Q'ty /Eng.	Supply	Location	Specifications
Air starter	1	M	E	Min. Starting air press. : 1.28MPa
Starting Air Press. Regulating Device	1	M	E	Regulating Press.: 2.94MPa(max.) → 0.98MPa
Air Reservoir		S	H	Working Press. 2.94 MPa

4-7. Setting & Coupling Parts

Parts Name	Q'ty /Eng.	Supply	Location	Specifications
Common Bed	1	M	E	Incorporated L.O. Sump Tank With Jack Bolts
Platform	1	M	E	Fuel Injection Pump side with Handrail and Ladder

4-8. Engine Control & Monitoring Equipments for Remote (Auto) Starting/Stopping

4-8-1. Engine Control

Parts Name	Q'ty /Eng.	Supply	Location	Specifications
Control System				PB: Push Button
•Local Start is done by Elect. PB on Eng. following to "Local.-Remote" change-over Switch beside PB				
•Local Stop is done by Mechanical Handle on Eng. with Start. Interlock Switch combined Alarm Reset Switch. Mechanical Handle has Two Position of "Stop - Run" (It takes priority over all Electrical system)				
•Elect. Emergency Stop can be operated by Local Panel or Remote control Panel				
Control Source	1	M	E	Control Air of 0.64～1.0MPa And Electric (DC24V)Operation
Eng. Speed Sensor	1	M	E	Magnetic Pickup
Speed Detector (Speed Relay)	1	M	Control Panel	•Low speed(14) :Set.:125min^{-1} for Air Motor MV cancel. •Middle speed(13) :Set.:200min^{-1} for Secondary Air Motor MV cancel, Starting circuit cancel & Blocking alarm •Over speed "12" Set.:112～115% of rated speed for signal of Safety Stop
Magnetic Valve for Engine Start	1	M	E	Open & Eng. Starting Function at Energizing DC24V, 0.25A, Rating : 1Min.
Mag. Valve of Eng. Stop for Safety	1	M	E	Open & Eng. Stopping Function at Energizing DC24V,0.38A,Rating : Continuous
Switch for Stop Handle of Engine	1	M	E	Switch ON at Run position for Stand-by and Reset of Safety Stop
Switch for Cont. Position	1	M	E	Select for Remote/Auto-Engine Side
Switch for Turning Gear	1	M	E	Switch ON at Dis-engage of Turning gear for Stand-by
Engine Control Panel (mounted on engine)	1	M	E	Auto Start/Stop & Safety Stop Control circuit Electric Source : DC24V & AC220V

4-8-2. Engine Safety Stop

Over Speed	1	M	Control Panel	Operated at 112～115% of rated speed by Over Speed Signal(12) of above Speed Relay
Lub. Oil Press. Low	1	M	E	Press. switch Abnormal ON≦0.45MPa
Jacket Water High Temp.	1	M	E	Temp. switch Abnormal ON≧ 100 ℃

Parts Name			Gauges fitted on Eng. Q'ty/Eng.	Gauges fitted on Eng. Specifications	Alarm or Remote display Q'ty/Eng.	Alarm or Remote display Specifications
Tachometer			1	Electric(0-1200min^{-1}): 4-20mA		
PRESSURE	Kind of Press. Gauge			Bourdon tube, Size: ϕ 60 Glycerin filled Type		
	Lub. Oil at Eng. inlet		1	Scale : 0～1.0 MPa Normal: 0.55～0.60MPa	1	Sensor4-20mA(0～1.0MPa) Alarm≦0.50MPa
	Prim. LO at Eng. inlet		–	Above Press. Gauge is available Normal:0.02～0.25MPa	1	Press. switch for Alarm Abnormal OFF≦0.02MPa
	Fuel Oil at Eng. inlet		1	Scale : 0～2.0 MPa Normal:0.70～0.80MPa	1	Sensor4-20mA(0～1.6MPa) Alarm≦0.60MPa
	Fresh Water (H.T.) at Eng. inlet		1	Scale : 0～0.6 MPa Normal:0.15～0.50MPa	1	Sensor 4-20mA(0～0.6MPa) Alarm≦0.13MPa
	Fresh Water (L.T.) at Eng. inlet		1	Scale : 0～0.6 MPa Normal:0.15～0.50MPa		
	Boost Air at Eng. inlet		1	Scale : 0～0.6 MPa Normal: Depend on load	1	Sensor 4-20mA(0～0.6MPa) (For UG-25+ Governor)
	Start. Air at Eng. inlet		1	Scale : 0～2.5 MPa Normal:0.85～1.0MPa	1	Sensor4-20mA(0～1.6MPa) Alarm≦0.80MPa
	Control Air at Eng. inlet		–	Normal:0.70～1.0MPa	1	Press. switch for Alarm Abnormal OFF≦0.60MPa
TEMPERATURE	Kind of Thermometer			Bar type Thermometer with Protective case		
	Lub. Oil	Cooler inlet	1	Scale : 0～100 ℃ Normal : 65～ 85 ℃		
		Engine inlet	1	Scale : 0～100 ℃ Normal : 50～ 70 ℃	1	Sensor Pt 100 ohm(0～200℃) Alarm≧ 75 ℃
	Fuel Oil	Engine inlet	1	Scale : 0～200 ℃ Normal : 140～150 ℃ Note. Viscosity control takes precedence.		Note. High Viscosity Alarm≧ 17cSt.
	Fresh Water (H.T.)	A/C inlet	1	Scale : 0～100 ℃ Normal : 70～ 85 ℃		
		Engine inlet	1	Scale : 0～100 ℃ Normal : 75～ 85 ℃		
		Engine outlet	1	Scale : 0～120 ℃ Normal : 80～ 90 ℃	1	Sensor Pt 100 ohm(0～200℃) Alarm≧ 95 ℃
	Fresh Water (L.T.)	A/C inlet	1	Scale : 0～100 ℃ Normal : ～ 36 ℃		
		A/C outlet	1	Scale : 0～100 ℃		
		L/C outlet	1	Scale : 0～100 ℃		
	Exh. Gas (digital thermometer)	Cyl. outlet	6	Scale : 0～650 ℃ Normal: Depend on load		
		T/C inlet	2	Scale : 0～650 ℃ Normal: Depend on load	2	Sensor Pt 100ohm(0～700℃) Alarm≧600 ℃
		T/C outlet	1	Scale : 0～650 ℃		
	Boost Air	Engine inlet	1	Scale : 0～100 ℃ Normal: Depend on load		

	Parts Name	Gauges fitted on Eng.		Alarm or Remote display	
		Q'ty/ Eng.	Specifications	Q'ty/E ng.	Specifications
OTHERS	F.O. Leakage Tank of High Press. Pipes	–		1	Abnormal OFF at High Level
	Lub. Oil Sump Tank	1	Sounding Stick	1	Abnormal OFF at Low Level
	Differential Press. of Lub. Oil Strainer	1	Differential Press. Indicator	1	Abnormal OFF≧0.15MPa (Note. Alarm repose timer set: 10min.)
	Differential Press. Of FO Final Filter	1	Differential Press. Indicator		

5. MISCELLANEOUS

Item	
Spare Parts and Tools	1set/1 ship: as per requirement of Classification of society. Please see the attached list of spare parts and tools. Material of box : Steel Box
Paint Color	Exterior surface of DG set and others without electric device : Munsell No. : 7.5BG 7/2
Units and Language	Units : SI Documents and Name Plates : English & Chinese Caution Plates : English & Chinese
Shop Test	Please refer to another sheet for Test and Inspection plan
Number of copies of Documents	For Conference : _____ For Approval : _____ For Installation : _____ For Final : _____

Lubrication Oil Brand Name Table for 6EY22(A)LW Engine

Classification	System oil		
Applied Fuel oil	M.D.O	30cSt/50℃ H.F.O.	180,380,700,cSt/50℃ H.F.O.
Total Base Number(T.B.N)	9～15	16～25	30～42
Supplier			
YANMAR	YANMARMARINE SUPER OIL 30, 40	-----	-----
IDEMITSU KOSAN	DAPHNE MARINE OIL SX30, 40	DAPHNE MARINE OIL MV30, 40 SW30. 40	DAPHNE MARINE OIL SA30, 40 SH40
CASTROL	CASTROL MHP153, 154 SEAMAX EXTRA 30, 40 MCL 30, 40	CASTROL TLX 203, 204	CASTROL TLX 303. 304 CASTROL TLX 403, 404
BRITISH PETROLEUM	BP ENERGOL DS3-153, 154	BP ENERGOL IC-HFX203, 204	B.P. ENERGOL IC-HFX303, 304
CHEVRON TEXACO (FAMM,CALTEX)	DELO 1000 MARINE SAE 30, 40 TARO 12 XD 30, 40 TARO 16 XD 30, 40	DELO 2000 MARINE SAE 30, 40 TARO 20 DP 30, 40	DELO 3000 MARINE SAE 30, 40 DELO 3400 MARINE SAE 30, 40 TARO 30 DP 30, 40
COSMO OIL	COSMO MARINE SUPER 30, 40	COSMO MARINE 3025, 4025	COSMO MARINE 3040, 4040
FUJI KOSAN	FUKKOL MARINE 312,412	FUKKOL MARINE 320,420	FUKKOL MARINE 330,430
EXXON MOBIL	MOBIL GARD 312,412 EXXMAR 12TP 30, 40	MOBIL GARD 312, 412 MOBIL GARD 330, 430	MOBIL GARD 330, 430 MOBIL GARD 340, 440 EXXMAR 30 TP30, 40 EXXMAR 40 TP30, 40
KYGNUS OIL	KYGNUS MARINE DXO 30, 40	KYGNUS MARINE DX 330, 340	-----
JAPAN ENERGY/ELF	DISOLA M4015	AURELIA XL4030	AURELIA XL4040
NIPPON OIL CORPORATION	MARINE T103, T104	MARINE T203, T204	MARINE T303, T304
SHELL	GADINIA OIL 30, 40	ARGINA S OIL 30, 40 RIMULA FB OIL 30, 40	ARGINA T OIL 30, 40 ARGINA X OIL 30, 40
NOTE	Turbine oil : Same System Oil (branched system oil to turbine) Governor oil : Same System Oil (different sump) Generator bearing oil : According to generator maker recommended oil. (Same system oil in case of forced lubrication from engine.) Generator bearing oil :		

三角法
3RD ANGLE PROJECTION

MASS OF PARTS FOR HOISTING	
CYLINDER HEAD	: 179 kg
PISTON WITH ROD	: 77 kg
TURBO CHARGER(A135)	: 220 kg
AIR COOLER	: 150 kg
LUB.OIL PUMP	: 45 kg
C.W.PUMP	: 33 kg
CAM SHAFT	: 171 kg
LUB.OIL COOLER WITH FILTER & THERMOSTAT	: 258 kg

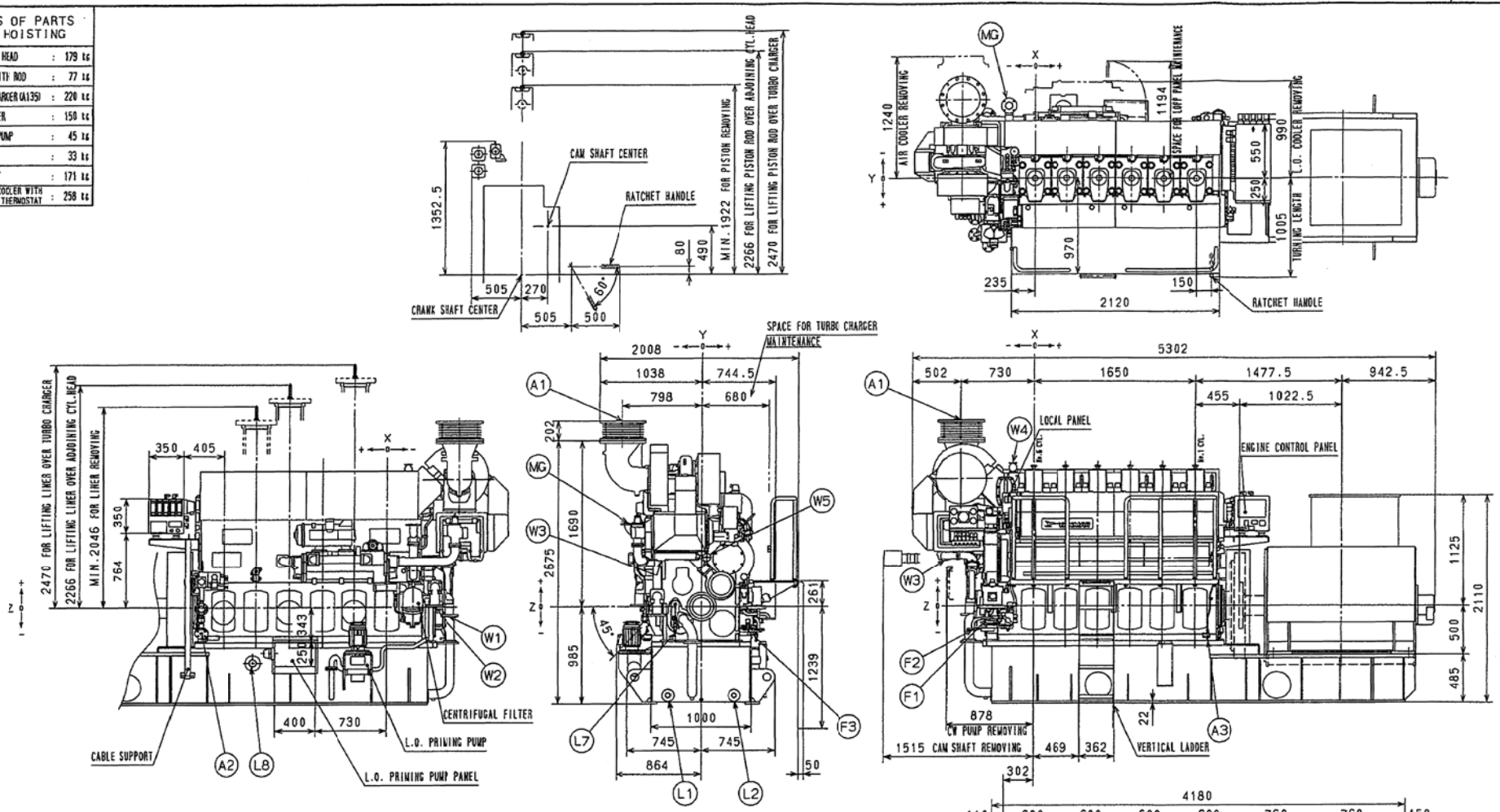

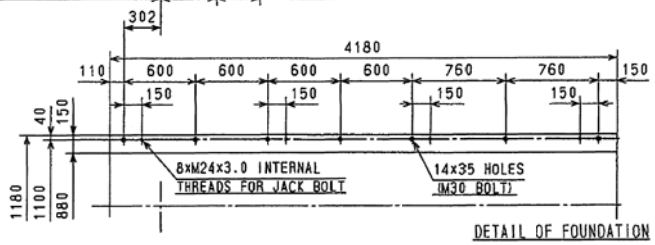

DETAIL OF FOUNDATION

SIZE AND DIMENSIONS OF PIPE CONNECTIONS (FLANGES MARKED * ARE SUPPLIED BY US)															
SYMBOL	PIPE CONNECTIONS	SIZE	PIPE	X	Y	Z	FLANGE	SYMBOL	PIPE CONNECTIONS	SIZE	PIPE	X	Y	Z	FLANGE
W1	COOLING WATER INLET	5^{S}-80	80A	-635	-442	-95		L8	L.O. OVER FLOW	5^{S}-65	65A	1350	-610	-561	
W2	COOLING WATER OUTLET	5^{S}-80	80A	-483	-620	5		L9							
W3	HOT WATER INLET	5^{S}-15	15A	-893	-403	468									
W4	F.W. AIR VENT	5^{S}-15	15A	-210	-270	1458		F1	FUEL OIL INLET (H.F.O.)	16^{S}-25	25A	-462	682	-131	
W5	HOT WATER OUTLET	5^{S}-15	15A	-724	50	505		F2	FUEL OIL OUTLET (H.F.O.)	16^{S}-25	25A	-600	575	-240	
W6								F3	FUEL OIL DRAIN	5^{S}-25	25A	-587	467	-236	
W7								F4							
L1	L.O. INLET	5^{S}-40	40A	-422	-330	-898		F5							
L2	L.O. OUTLET	5^{S}-40	40A	-422	330	-898		F6							
L3								F7							
L4								MG	MIST GAS OUTLET	5^{S}-65	65A	-265	-735	852	
L5								A1	EXHAUST OUTLET	5^{S}-350	350A	-730	-798	1892	
L6								A2	STARTING AIR INLET	40^{S}-25	25A	1875	-647	-260	
L7	L.O. OUTLET FOR L/T C.W. SHUT-OFF VALVE	-----	O.D.12	-640	-261	-267		A3	CONTROL AIR INLET	-----	O.D.10	1778	550	-350	

PRINCIPAL DATA			
DIESEL ENGINE		AC. GENERATOR	
MODEL	6EY22ALW	MODEL	FE 5538-8
OUTPUT	1300 kW	OUTPUT	1120 kW
SPEED	900 min^{-1}	VOLTS	450 V
NO.OF CYL.	6	AMPS	1795 A
BORE	220 mm	SPEED	900 min^{-1}
STROKE	320 mm	NO.OF POLES	8
DIRECTION OF ROTATION	ANTI-CLOCK WISE VIEW FROM FLYWHEEL SIDE	FREQUENCY	60 Hz
		P.F.	0.8
		INSULATION	F
MASS (APPROX.)	10500 kg	MASS (APPROX.)	5030 kg
MAKER	YANMAR	MAKER	TAIYO
TOTAL MASS	(APPROX.) DRY 18000 kg		

製図 DRAWN	E.HAKUI	納入先 CUSTOMER	DALIAN COSCO KHI SHIP ENGINEERING CO.,LTD
設計 DESIGNED	Y.MORIKAWA		
検図 CHECKED	K.Ishikawa	WORK No.	R3-B18601 S.No. DE014
グループリーダー MANAGER	K. Ono	名称 NAME	6EY22ALW X1120kW 外形図 OUTLINE
ヤンマー株式会社 開発部 システム開発部 YANMAR CO., LTD. DEVELOPMENT DEPT. ENGINEERING DEPT.		SCALE	1:30
		DATE	'13.4.17
		第三角法 3rd ANGLE PROJECTION	コード DRAW No. B3-50633-2140

HICAD

	COCK		SOLENOID VALVE		LOOP SEAL	T	THERMOMETER		
	BALL VALVE		FLANGE FITTING	O.D.	PIPE OUTSIDE DIAMETER	P	PRESSURE GAUGE		
	GLOBE VALVE		SHUT-OFF VALVE	STPG	CARBON STEEL PIPE FOR PRESSURE TUBE	TS	TEMPERATURE SWITCH		
	NEEDLE VALVE		JOINT	CUT	COPPER PIPE	PT	PRESSURE TRANSMITTER		
	AUTOMATIC PRESS. REGULATING VALVE		BALL TYPE JOINT	×××	CAPILLARY TUBE	RB	RESISTANCE TEMP. SENSOR		
	SAFETY VALVE		BOSS		FILTER	PS	PRESSURE SWITCH		
	BLOCKING VALVE		EXPANSION JOINT						
	PRESS.REDUCING VALVE		FLEXIBLE PIPE COUPLING						

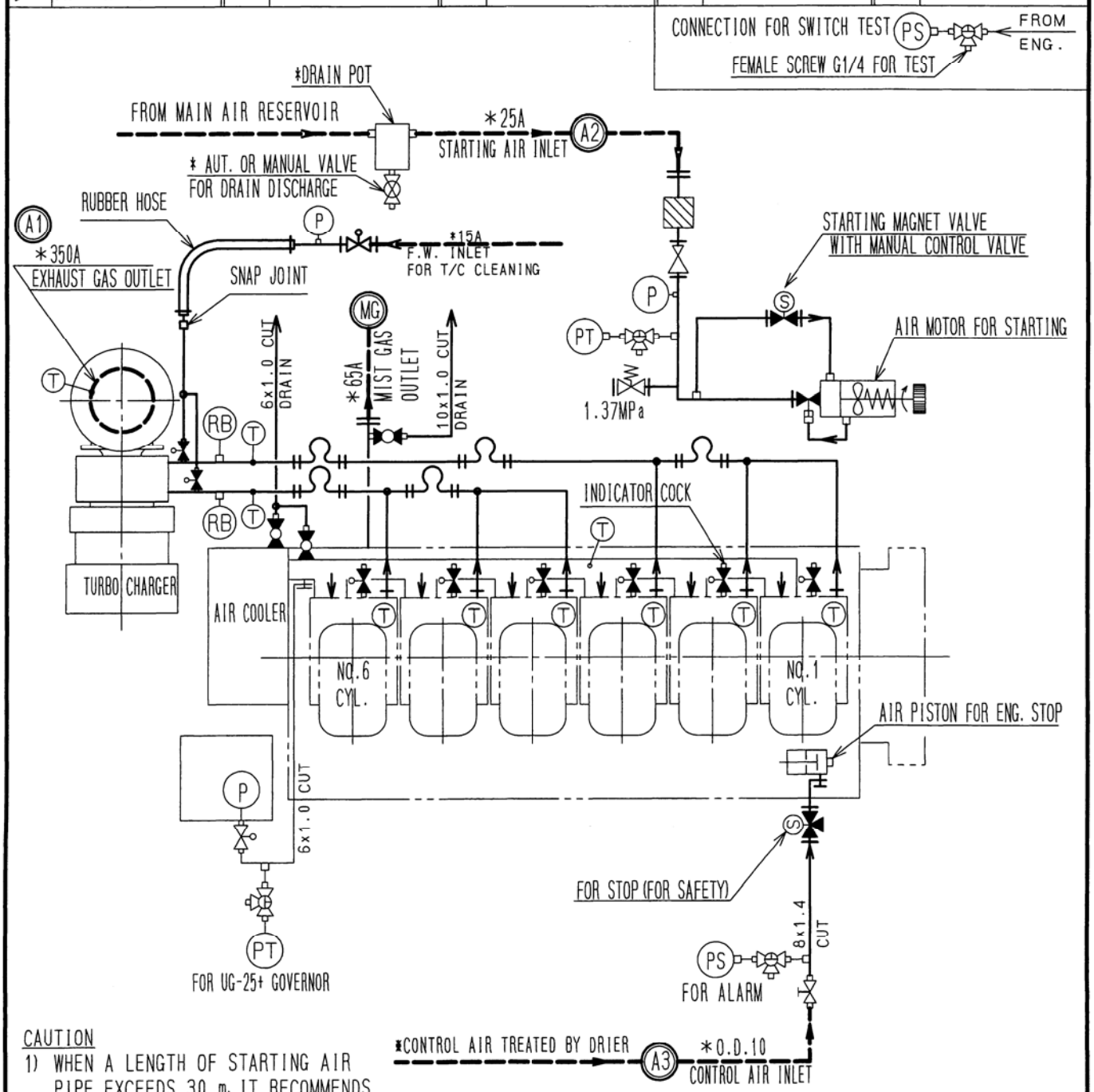

CAUTION

1) WHEN A LENGTH OF STARTING AIR PIPE EXCEEDS 30 m、IT RECOMMENDS A CHANGING TO ONE SIZE UP PIPE IN ORDER NOT TO START FAILURE.
2) DRAIN POT OR VALVE IS TO BE PROVIDED AT LOWEST POSITION OF STARTING AIR LINE.

REMARKS

1) PIPES AND FITTINGS MARKED * IN THIS DRAWING ARE NOT SUPPLIED BY YANMAR.
2) CHARACTERS IN ◎ ARE SAME AS ONES OF PIPE CONNECTION IN OUTLINE DRAWING.

MODEL: 6EY22 (A) LW PIPING LAYOUT

EXH. GAS & SUCTION AIR SYSTEM

ヤンマー株式会社 YANMAR CO., LTD.	DWG. No.	P3-50633-1400

	PUMP		GLOBE VALVE		FLANGE FITTING		FLEXIBLE PIPE COUPLING	T	THERMOMETER
M	MOTOR		NEEDLE VALVE		SHUT-OFF VALVE		LOOP SEAL	P	PRESSURE GAUGE
			SWING CHECK VALVE		SPECTACLE FLANGE	O.D.	PIPE OUTSIDE DIAMETER	C	COMPOUND GAUGE
	BUILT-IN CHECK VALVE		AUTOMATIC TEMP. REGULATING VALVE		JOINT	STPG	CARBON STEEL PIPE FOR PRESSURE TUBE	PS	PRESSURE SWITCH
	THREE-WAY COCK		SAFETY VALVE		BALL TYPE JOINT	CUT	COPPER PIPE	TS	TEMPERATURE SWITCH
	BUTTERFLY VALVE		PISTON VALVE		BOSS	×××	CAPILLARY TUBE	FS	FLOAT SWITCH
	COCK		THREE-WAY PISTON VALVE		ORIFICE		GLAZED LEVEL GAUGE	PT	PRESSURE TRANSMITTER
	BALL VALVE		FLOW RATE REGULATING VALVE		FLEX-MASTER		REDUCER	RB	RESISTANCE TEMP. SENSOR

CONNECTION FOR SWITCH TEST (PS) FROM ENG.
FEMALE SCREW G1/4 FOR TEST

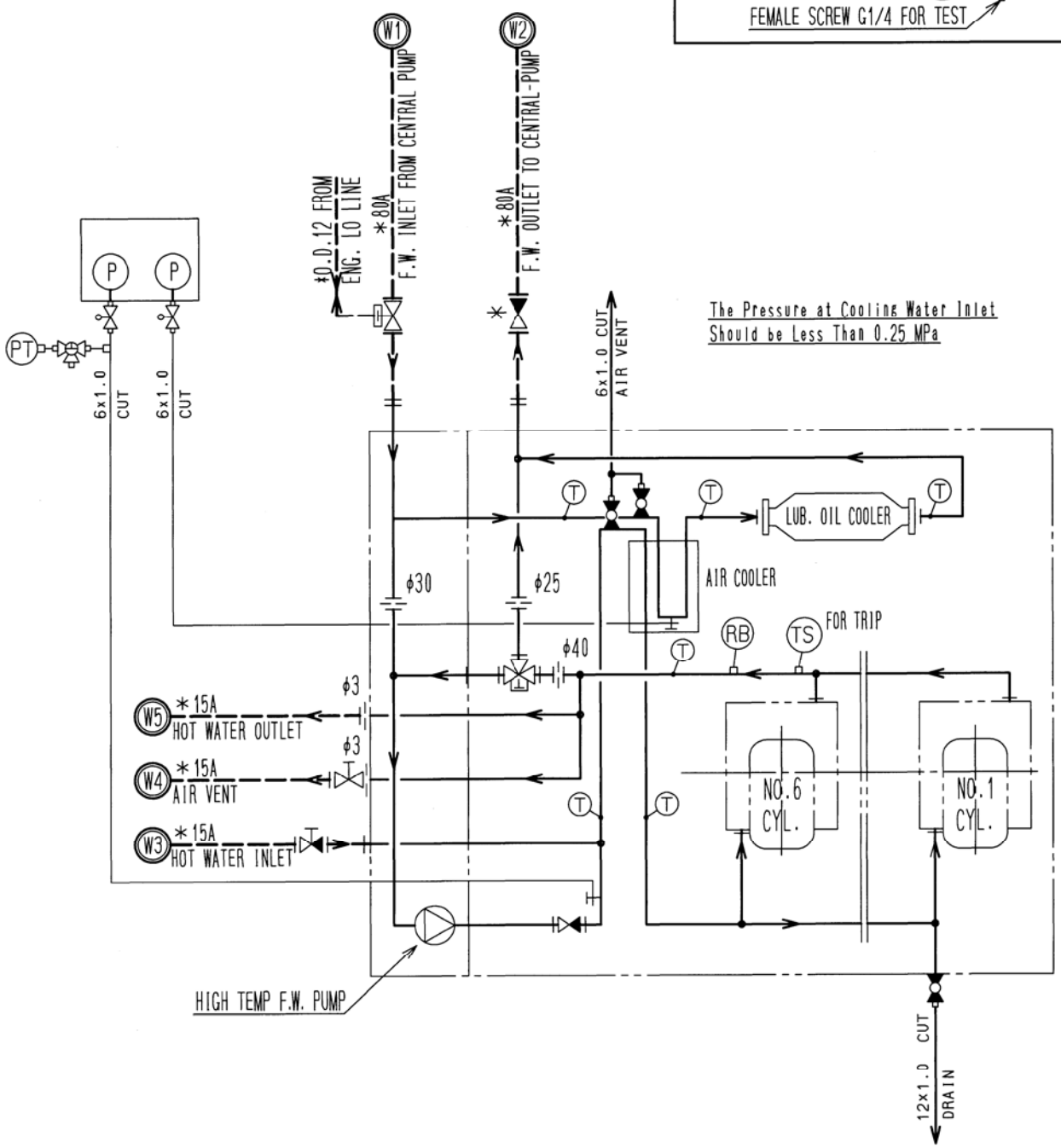

CAUTION
1) PIPE SIZE FOR COMMON LINE IS TO BE DECIDED BY TOTAL FLOW RATE AND PIPING LOSS.

REMARKS
1) PIPES AND FITTINGS MARKED * IN THIS DRAWING ARE NOT SUPPLIED BY YANMAR.
2) CHARACTERS IN ◎ ARE SAME AS ONES OF PIPE CONNECTION IN OUTLINE DRAWING.

MODEL: 6EY22 (A) LW PIPING LAYOUT
COOLING WATER SYSTEM

ヤンマー株式会社
YANMAR CO., LTD.

DWG. No. P3-50633-2660

注意事項

1. 低質重油にて始動・停止する場合は、プレヒーティングシステムを設置し、スタンバイ機関を65~70℃の温水で暖機してください。
2. プレヒーティングシステムについては本図を参考にシステムを計画してください。
3. プレヒータから機関までの船内配管が長く、暖機水の温度低下が懸念される場合は、温度検出位置または設定温度を考慮して、スタンバイ機関の暖機水温度が65℃以上となるように計画してください。
4. スタンバイ機関に低温水が流入して、暖機水温度が低下することを防止する為、低温水入口ラインに自動開閉弁を、低温水出口ラインに逆止弁を装備してください。
5. 運転機関の冷却水が流出し、暖機水温度が低下することを防止する為、暖機水入口ラインには必ず逆止弁を装備してください。
6. プレヒーティングシステムの計画にあたっては、装備するプレヒーターを含めたシステムの圧力バランスを考慮し、必要に応じてオリフィスにて調整してください。
7. プレヒータのトラブル等によりジャケット水温度が65℃を下回る場合は、スタンバイ機関の燃料油を低質油からA重油に切換えてください。
8. メンテナンスに必要なバルブは、適宜必要な箇所に装備してください。

Caution

1. Pre-heating system to be install when engine is operated, start and stop on H.F.O.. Then stand-by engine to be warm up by hot water of 65~70℃.
2. For designing the pre-heating system, refer to this drawing.
3. In case of hot water temp. is lower than 65℃ by long onboard piping from preheating unit to engine, stand-by engine to be warm up by hot water of 65~70℃ considering the position of temp. sensor or setting temp. of pre-heating unit.
4. Auto shut off valve at cooling water inlet and check valve at cooling water outlet to be install to prevent lower temp. of hot water.
5. Check valve is to be install at pre-heating water inlet to prevent lower temp. of hot water.
6. When designing the pre-heating system consider the systen's pressure balance including the installed pre-heater. If need, adjust it using orifice.
7. In case of hot water temp. of stand-by engine is lower than 65℃ by any trouble of pre-heating unit etc. changeover the fuel oil from H.F.O. to M.D.O. in stand-by engine.
8. Please install the valves for maintenance, if necessary.

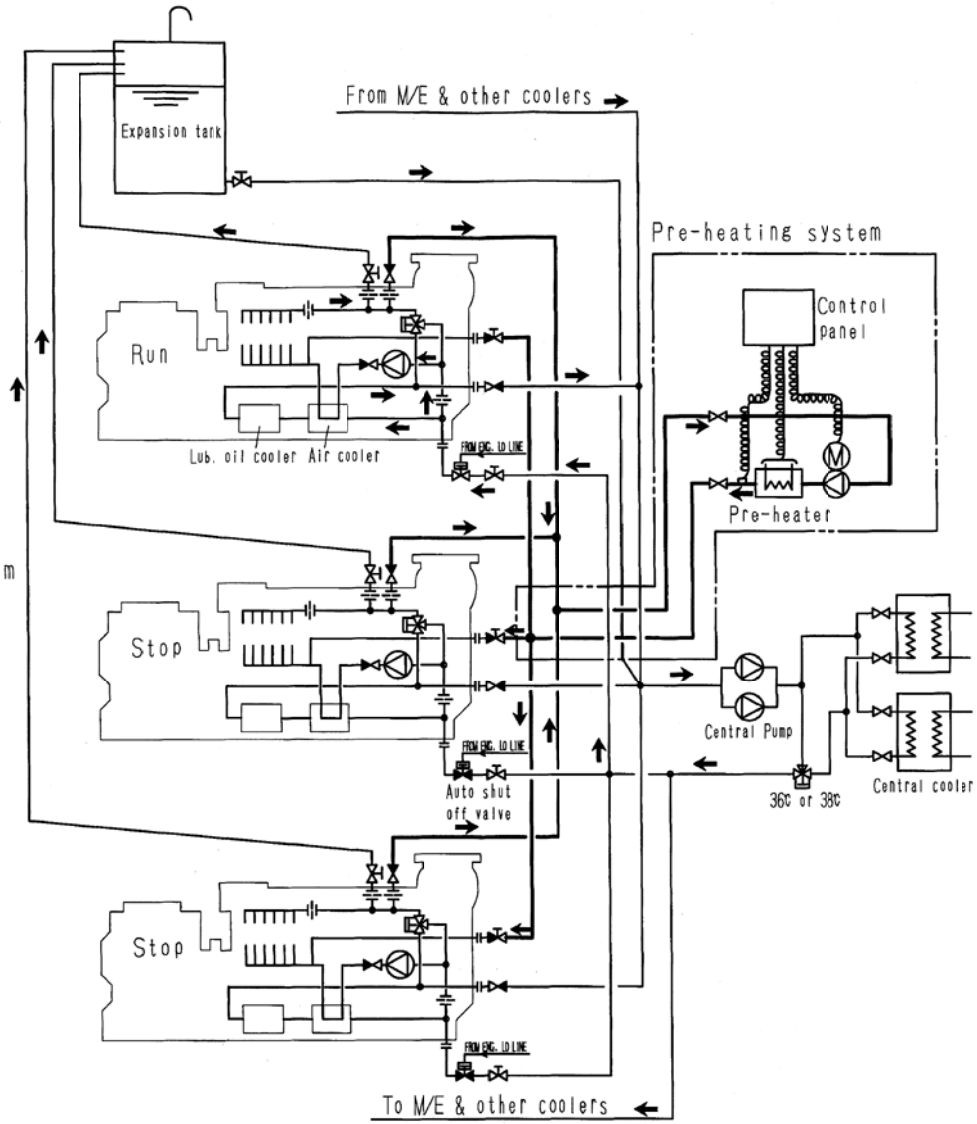

図 プレヒーティングシステム
Fig. Pre-heating System with Pre-heater

機関放熱量および暖機用循環ポンプ容量
Engine Heat Radiation and Pre-heating Circulation Pump Capacity.

	機関放熱量 Engine Heat Radiation (MJ/h)	ポンプ容量 Pump Capacity (m^3/h x m)
6EY18 (A) LW	37	1.5 x 20
6EY22 (A) LW	50	2.0 x 20

注記：
・上記の値は機関1台分を示します。
・上記の機関放熱量は、ジャケット冷却水温度70℃、機関室温度5℃の時、自然放熱する熱量を計算で求めた値で、船内配管表面における自然放熱量は含んでいません。

Note:
・Above values are for the capacity of one engine.
・Above engine heat radiation is calculated when the jacket cooling water temperature is 70℃ and engine room temperature 5℃. Not included the nature heat radiation of the onboard piping surface.

ジャケット水プレヒーティングシステム要領図
JACKET COOLING WATER PRE-HEATING SYSTEM DIAGRAM

ヤンマー株式会社
YANMAR CO., LTD.

DWG. No. Y4-00004-2240

HICAD

	PUMP		GLOBE VALVE		FLANGE FITTING		LOOP SEAL	PD	DIFF.PRESS.GAUGE
	HAND PUMP		NEEDLE VALVE		SHUT-OFF VALVE	O.D.	PIPE OUTSIDE DIAMETER	P	OIL SIGNAL
M	MOTOR		SCREWED CHECK VALVE		SPECTACLE FLANGE	STPG	CARBON STEEL PIPE FOR PRESSURE TUBE	PS	PRESSURE SWITCH
	FILTER		SWING CHECK VALVE		JOINT	STS	MACHINE STRUCTURAL CARBON STEEL PIPE	TS	TEMPERATURE SWITCH
	CENTRIFUGAL FILTER		BUILT-IN CHECK VALVE		BALL TYPE JOINT	×××	CAPILLARY TUBE	FS	FLOAT SWITCH
	POROUS PLATE FILTER CYLINDER		AUTOMATIC PRESS. REGULATING VALVE		BOSS			DPS	DIFF.PRESS.SWITCH
	BALL VALVE		AUTOMATIC TEMP. REGULATING VALVE		ORIFICE	T	THERMOMETER	PT	PRESSURE TRANSMITTER
	THREE-WAY COCK		SAFETY VALVE		FLEXIBLE PIPE COUPLING	P	PRESSURE GAUGE	RB	RESISTANCE TEMP. SENSOR

CONNECTION FOR SWITCH TEST (PS) FROM ENG.
FEMALE SCREW G1/4 FOR TEST

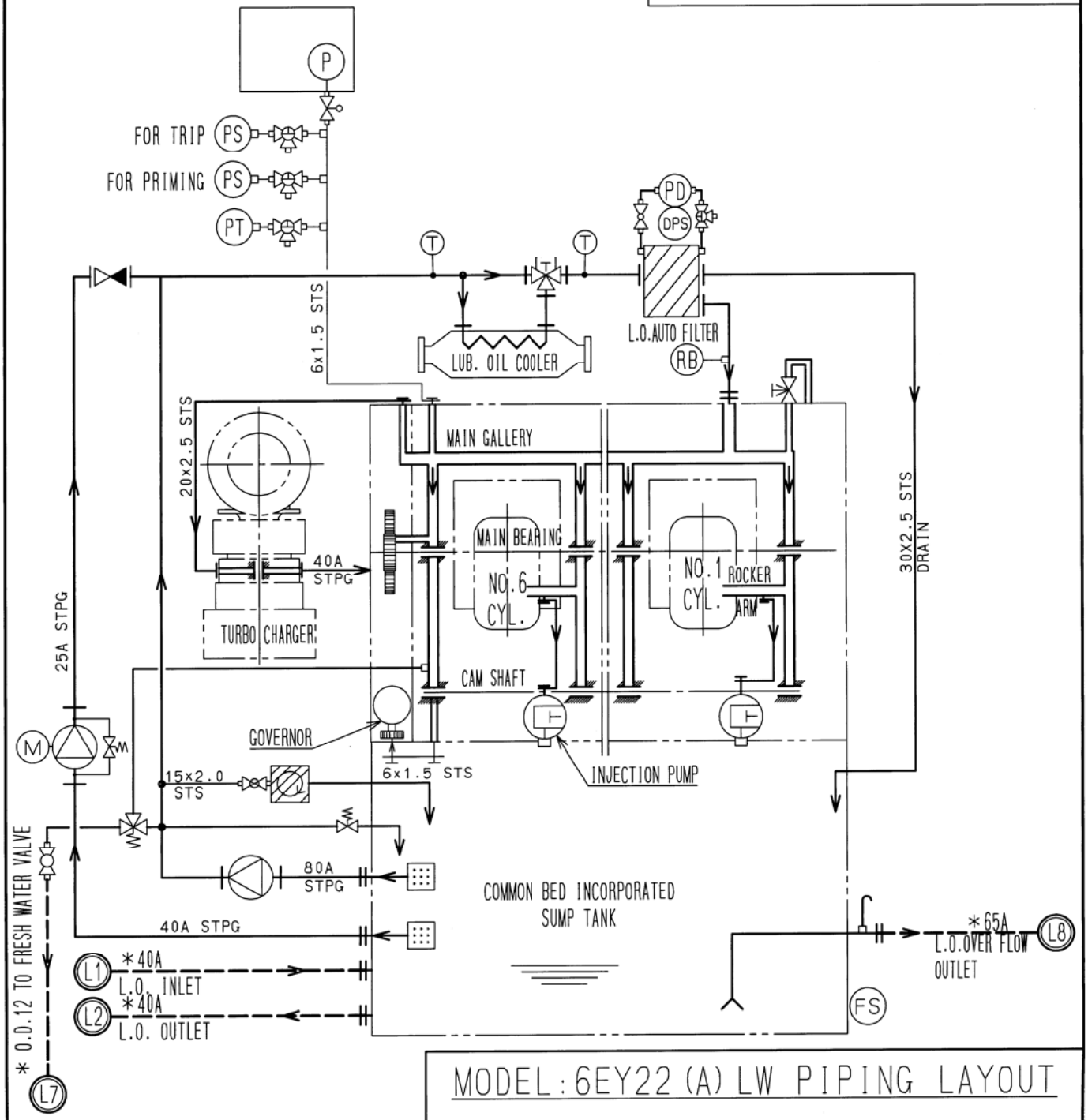

MODEL: 6EY22 (A) LW PIPING LAYOUT

LUBRICATING OIL SYSTEM

REMARKS
1) PIPES AND FITTINGS MARKED * IN THIS DRAWING ARE NOT SUPPLIED BY YANMAR.
2) CHARACTERS IN ◎ ARE SAME AS ONES OF PIPE CONNECTION IN OUTLINE DRAWING.

ヤンマー株式会社 YANMAR CO., LTD.	DWG. No.	P3-50633-2670

1. Lubricating oil Purification System

The lubricating oil purification system depends on the ship. Basic recommendations are given below.

1.1 General

When the engine is operated on Heavy Fuel Oil (H.F.O.), deterioration of lubricating oil is accelerated due to the entry of combustion residue in lubricating oil, which in turn accelerates the wear of major moving parts. Accordingly, it is important to select the appropriate type of lubricating oil and to purify lubricating oil appropriately to maintain its lubrication properties.

Basically, when using H.F.O. with a quality higher than 380 mm^2/s, we recommend a continuous purification by the centrifugal purifier as shown in 1.2 & 1.3. When using H.F.O. with a quality lower than 380 mm^2/s or Marine Diesel Oil (M.D.O.), the intermittent purification system as shown in 1.4 may be used.

1.2 Overflow Tank Purification System

In the case of parallel operation of multiple engines, we recommend the use of the continuous purification system with overflow tank as shown in Fig.1. When using this system, consider the following points:

- Plan the overflow tank capacity so that the total of the lubricating oil sump tank capacity and the overflow tank capacity becomes about 2.0 liters/kW. (However, the lowest capacity is assumed to be 1500ℓ.)
- Plan the lubricating oil purifier capacity so that the number of purification times for the full amount of lubricating oil inside the system becomes about 4 times per day.
- Plan that the flow velocity in the overflow pipe will not exceed 0.25 m/s. In addition, use a bend to the overflow joint flange of the lubricating oil sump tank for downward piping. (If the piping extends long horizontally, the oil level in the sump tank will be raised when the engine is inclined.)

1.3 Continuous Purification for Each Engine Unit (Direct Purification System)

In the case of conducting parallel operation of multiple engines just for a temporary period, each engine unit may be purified continuously as shown in Fig.2 instead of employing the overflow purification system. When using this direct purification system, consider the following points:

- Raise an appropriate caution plate or install a proper device so that lubricating oil will not be lost due to mis-operation of the sump tank outlet/inlet valve.
- Install the oil level alarm device (high, low) to detect the mis-operation of the sump tank inlet/outlet valve at an early stage.

1.4 Batch Purification System

When using the fuel oils with the quality of 380 mm^2/s or lower or M.D.O., a batch purification system as shown in Fig.3 may be employed. When using this batch purification system, consider the following items:

- Watch the lubricating oil properties carefully and conduct purification on a periodic basis.
- The batch purification may be implemented during the ship's voyage when the standby unit is available, but we recommend to implement purification during anchorage to ensure safety.
- The centrifugal lubricating oil strainer is mounted to the engine. In order to maintain the lubricating oil proprieties appropriately, it is recommended to install the fine strainer to purify the by-pass flow.

Fig.1 Overflow Purification System

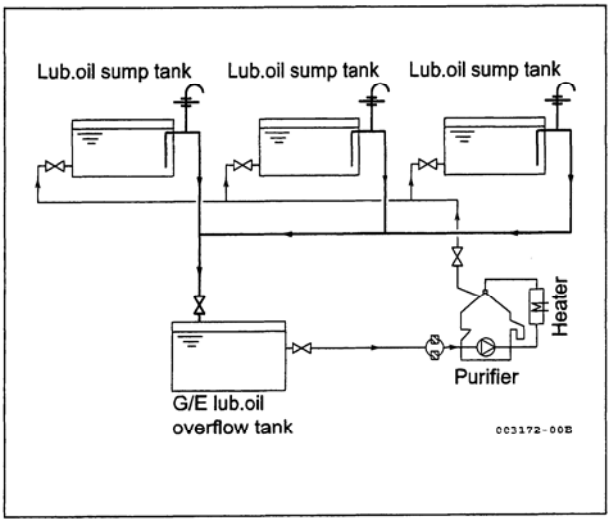

Fig.2 Direct Purification System

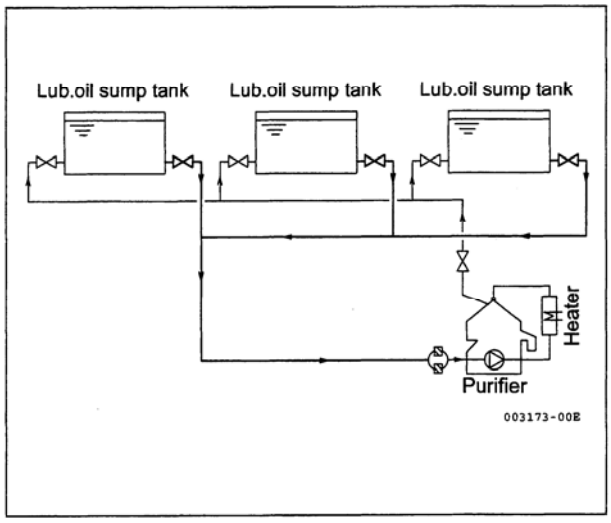

Fig.3 Batch Purification System

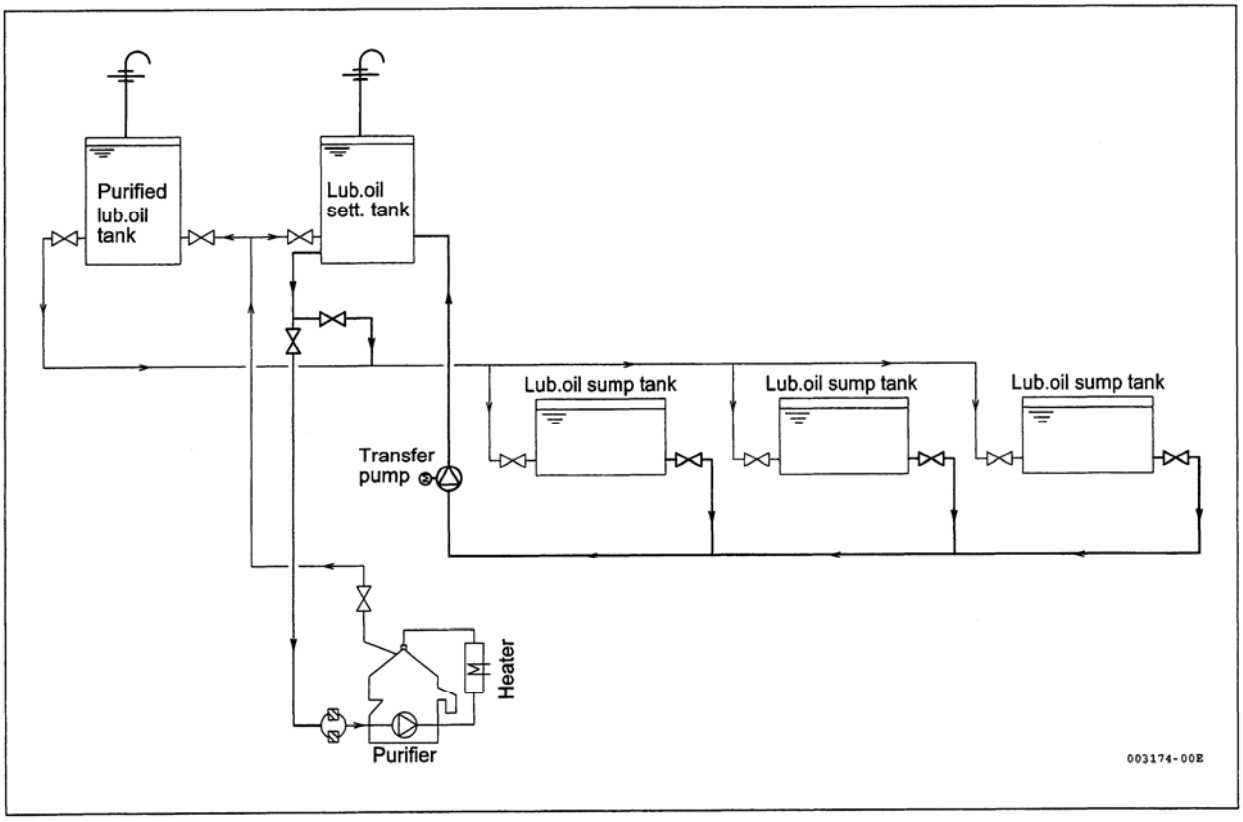

	GEAR PUMP		GLOBE VALVE		FLANGE FITTING		SEAL POT	P	PRESSURE GAUGE
			NEEDLE VALVE		SHUT-OFF VALVE		LOOP SEAL	PD	DIFF.PRESS.GAUGE
			SCREWED CHECK VALVE		SPECTACLE FLANGE	O.D.	PIPE OUTSIDE DIAMETER	PS	PRESSURE SWITCH
	FILTER		AUTOMATIC PRESS. REGULATING VALVE		JOINT	STPG	CARBON STEEL PIPE FOR PRESSURE TUBE	TS	TEMPERATURE SWITCH
			AUTOMATIC TEMP. REGULATING VALVE		BALL TYPE JOINT	STS	MACHINE STRUCTURAL CARBON STEEL PIPE	FS	FLOAT SWITCH
			SAFETY VALVE		BOSS	×××	CAPILLARY TUBE	DPS	DIFF.PRESS.SWITCH
	COCK		THREE-WAY PISTON VALVE		ORIFICE			PT	PRESSURE TRANSMITTER
	BALL VALVE		THREE WAY VALVE		FLEXIBLE PIPE COUPLING	T	THERMOMETER	RB	RESISTANCE TEMP. SENSOR

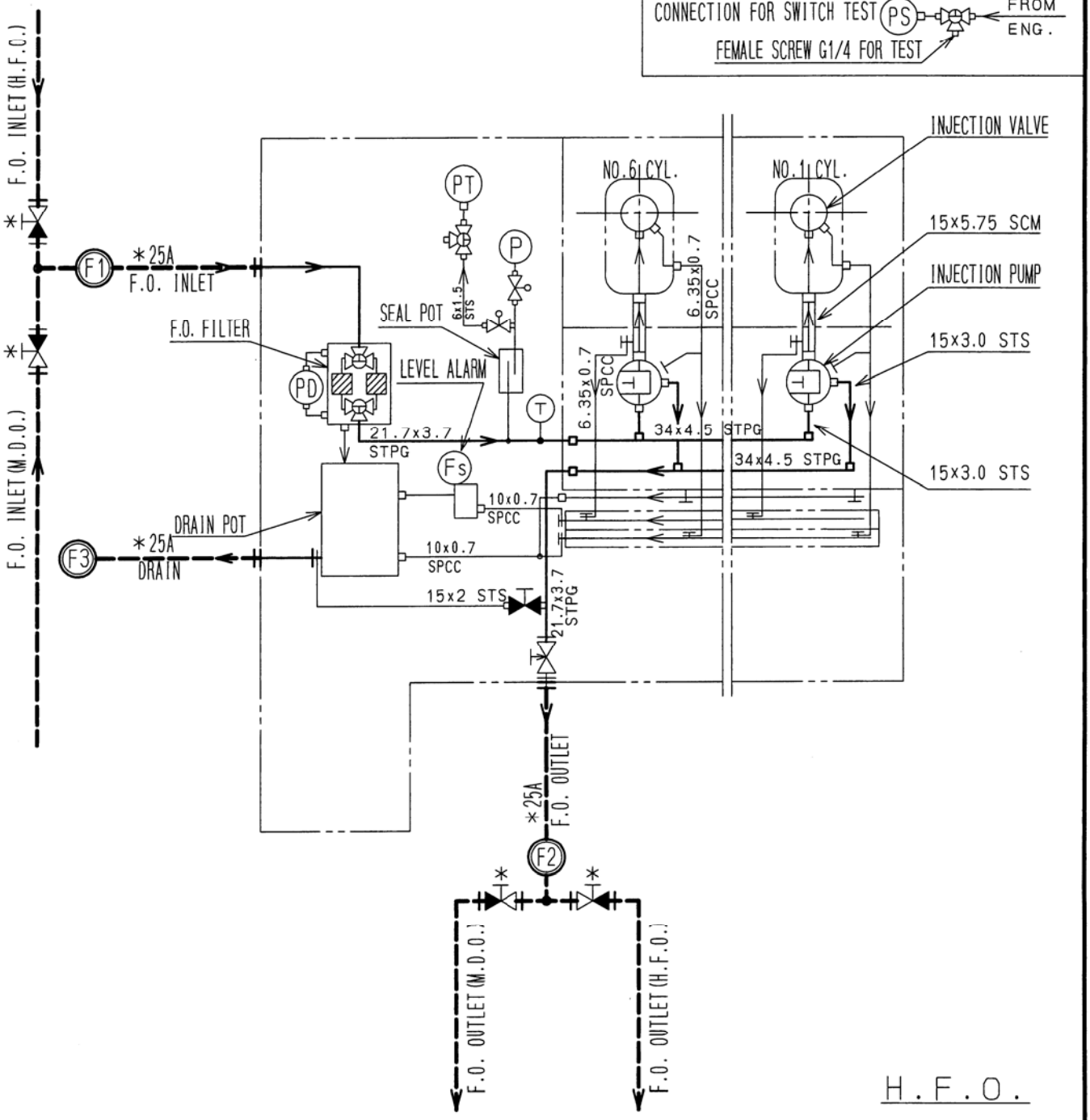

CAUTION

1) PIPE SIZE FOR COMMON LINE IS TO BE DECIDED BY TOTAL FLOW RATE AND PIPING LOSS.

REMARKS

1) PIPES AND FITTINGS MARKED * IN THIS DRAWING ARE NOT SUPPLIED BY YANMAR.
2) CHARACTERS IN ◎ ARE SAME AS ONES OF PIPE CONNECTION IN OUTLINE DRAWING.

MODEL: 6EY22 (A) L PIPING LAYOUT

FUEL OIL SYSTEM

ヤンマー株式会社

YANMAR CO., LTD.

DWG. No. P3-50633-0090

6. Reference System Diagram (e) (Mono-fuel System)

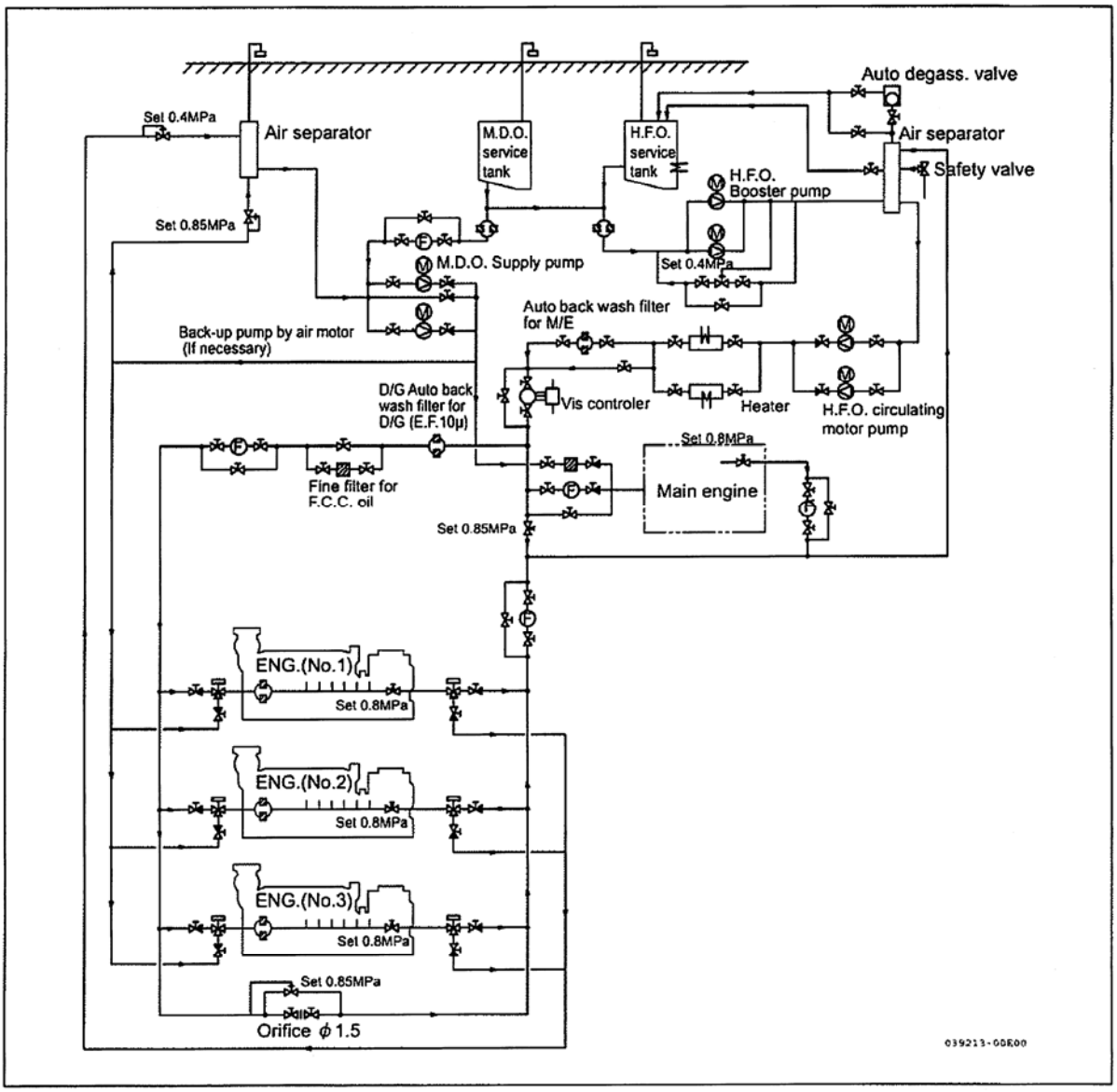

Remark:

- The necessary flow rate varies for main propulsion engines and generators. Make sure that you circulate the specified amount of heated fuel in generators.
- When designing the system, arrange that fuel oil viscosity at the generator engine inlet becomes 11 ~ 14 mm^2/s.
- Make sure that the fuel pressure inside the generator does not increase over 0.8 MPa. High pressure causes hunting.

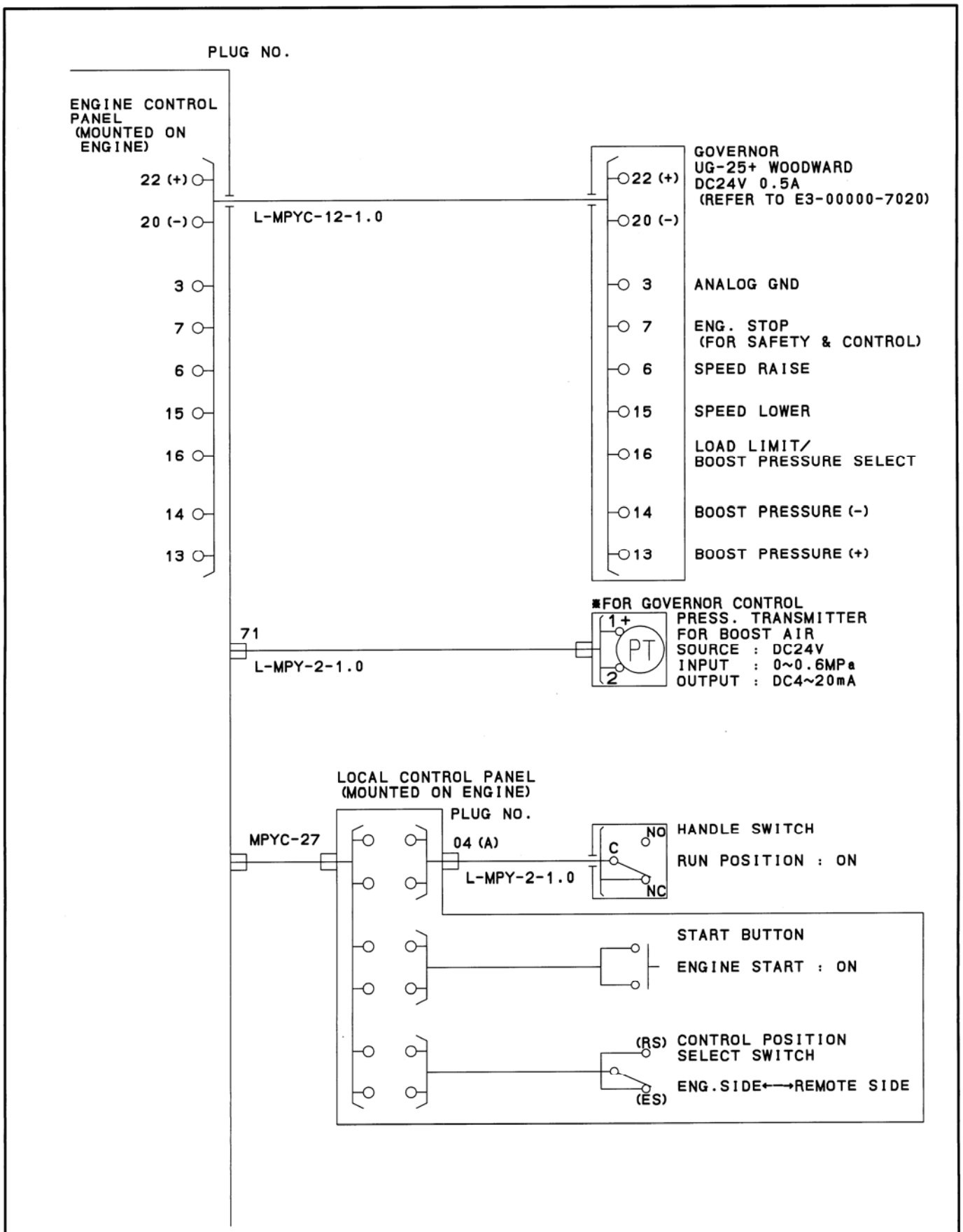

CONTINUED ON
THE NEXT PAGE

REMARK

·DOTTED LINES IN THIS CONNECTION DIAGRAM ARE NOT SUPPLIED BY OUR MANUFUCTORY.

6EY22 (A) LW

電 装 品 結 線 図 (制御盤付仕様)

CONNECTION DIAGRAM

ヤンマー株式会社

YANMAR CO., LTD.

DWG. No. E3-50633-0770

(1/4)

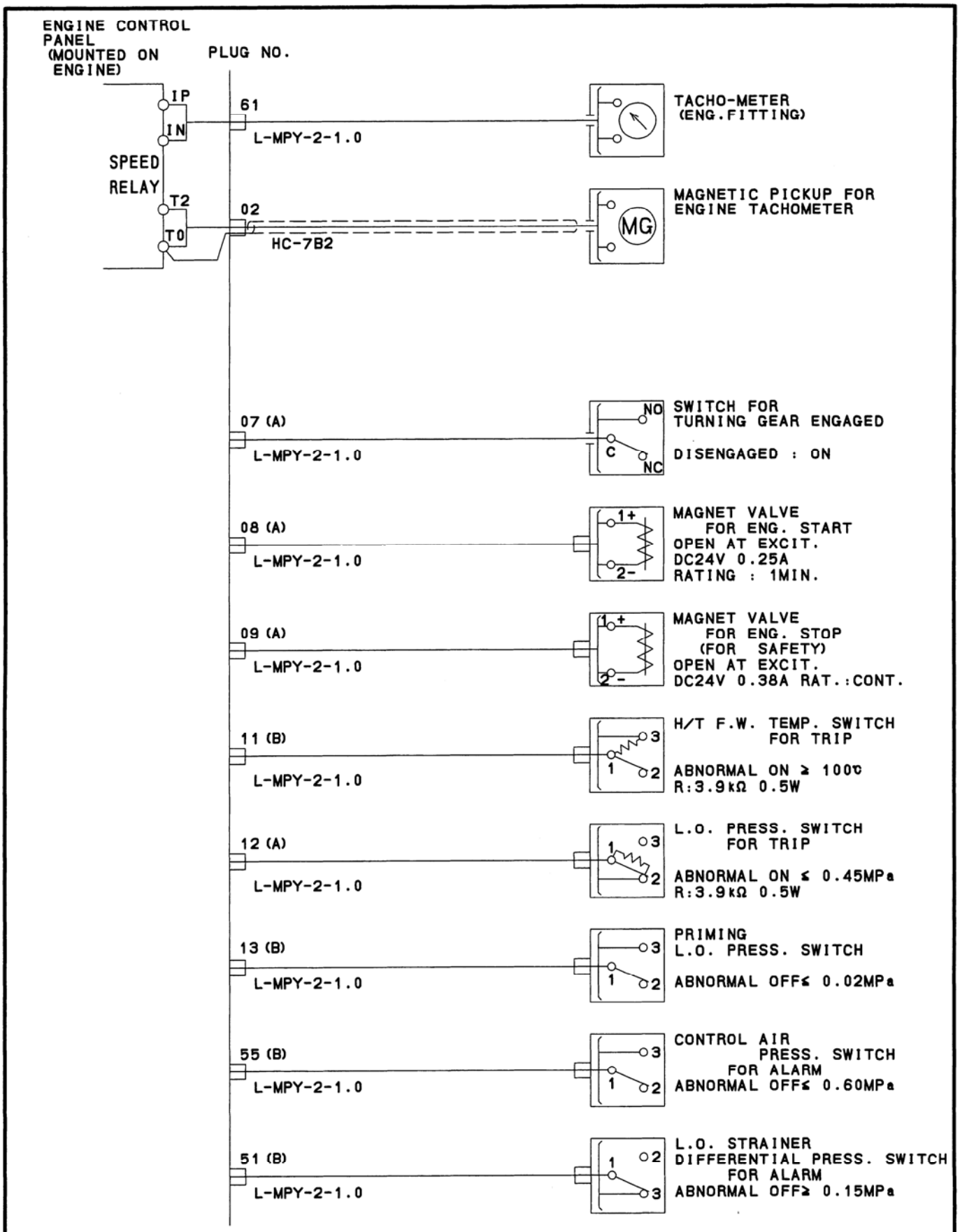

CONTINUED ON THE NEXT PAGE

REMARK

·DOTTED LINES IN THIS CONNECTION DIAGRAM ARE NOT SUPPLIED BY OUR MANUFUCTORY.

6EY22 (A) LW 電 装 品 結 線 図 (制御盤付仕様) CONNECTION DIAGRAM		
ヤンマー株式会社 YANMAR CO., LTD.	DWG. No.	E3-50633-0770 (2/4)

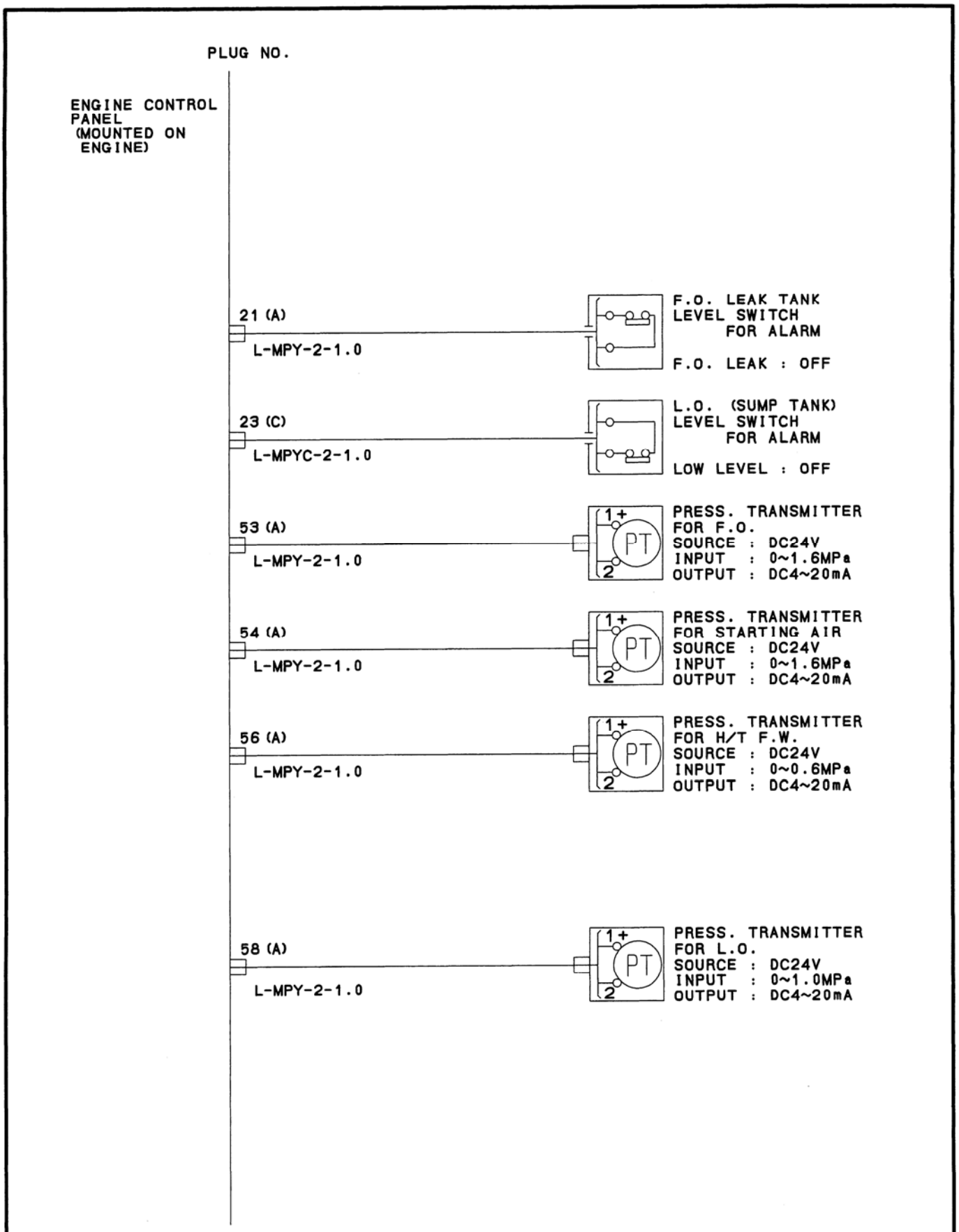

CONTINUED ON THE NEXT PAGE

REMARK

·DOTTED LINES IN THIS CONNECTION DIAGRAM ARE NOT SUPPLIED BY OUR MANUFUCTORY.

6EY22 (A) LW

電 装 品 結 線 図 (制御盤付仕様)

CONNECTION DIAGRAM

ヤンマー株式会社

YANMAR CO., LTD.

DWG. No. E3-50633-0770 (3/4)

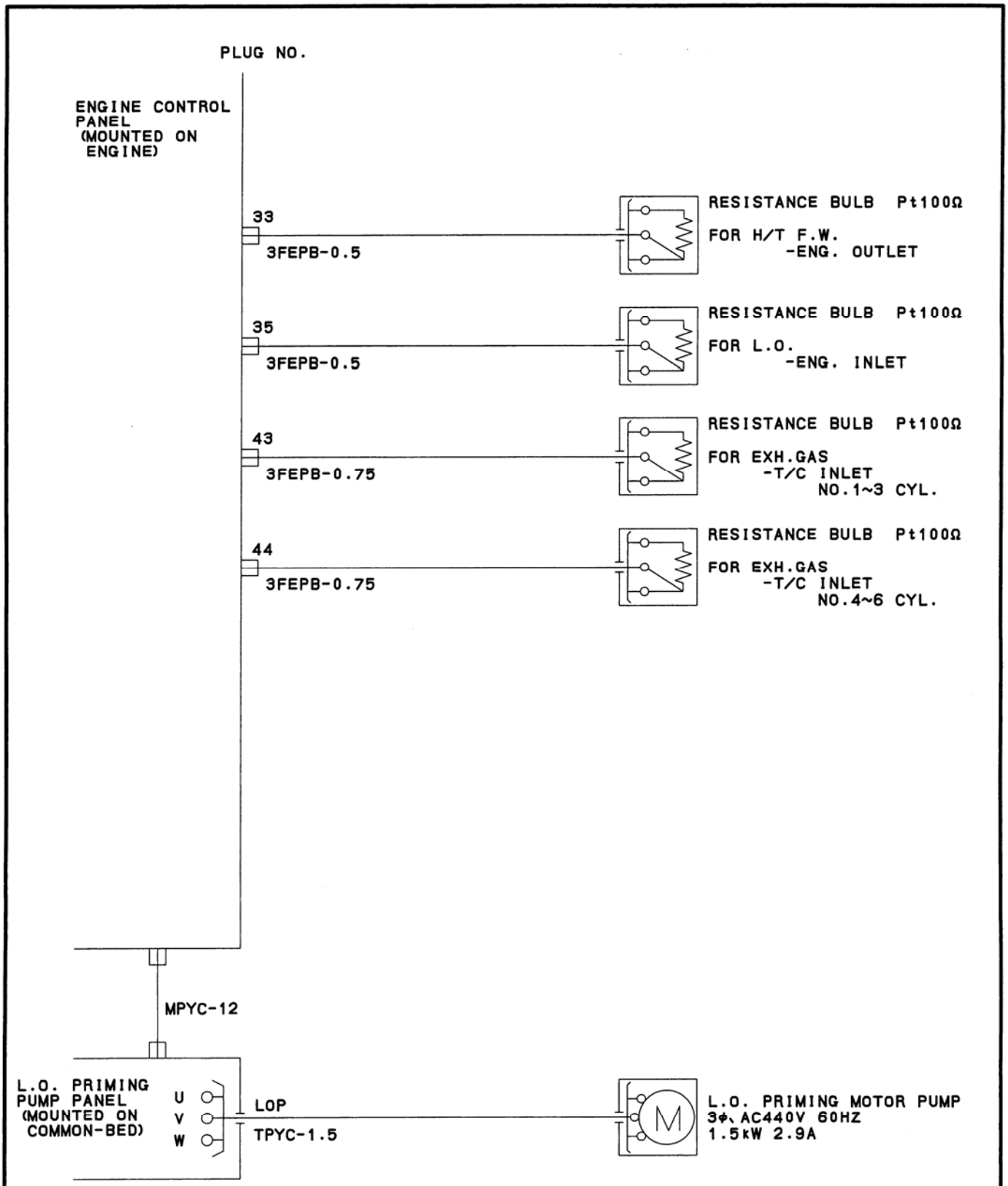

REMARK

·DOTTED LINES IN THIS CONNECTION DIAGRAM ARE NOT SUPPLIED BY OUR MANUFUCTORY.

6EY22 (A) LW 電 装 品 結 線 図 (制御盤付仕様) CONNECTION DIAGRAM		
ヤンマー株式会社 YANMAR CO., LTD.	DWG. No.	E3-50633-0770 (4/4)

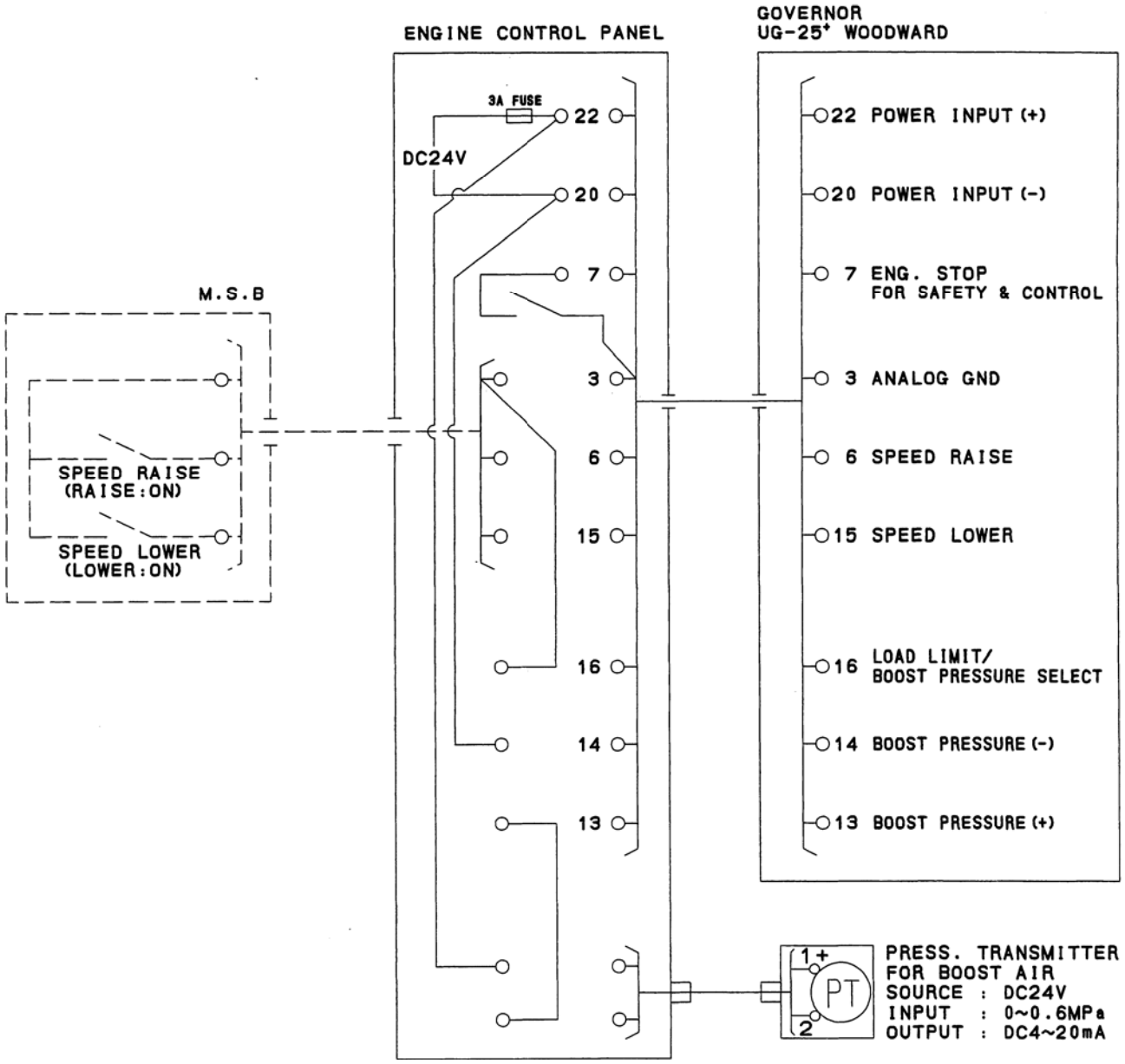

備　考

1．点線で示す配線及びリレーは、弊社所掌外となります。

2．各接点は、ドライ（無電圧）接点を使用して下さい。

REMARK

1.DOTTED LINES AND RELAY IN THIS CONNECTION DIAGRAM ARE NOT SUPPLIED BY OUR MANUFACTORY.

2.EACH CONTACT SHOULD USE A DRY (NO VOLTAGE) CONTACT.

UG-25+ガバナ結線図 CONNECTION DIAGRAM FOR UG-25+ GOVERNOR		
ヤンマー株式会社 YANMAR CO., LTD.	DWG. No.	E3-00000-7020

HICAD

The request and consideration for main switchboard or monitor side about diesel generator control (6EY18(A)L, 6EY22(A)L,6N18(A)L-V, 6(8)N21(A)L-V)

1) Engine control circuit is to be designed by the time schedule figure (6EY18(A)L: F3-00000-8481, 6EY22(A)L:F3-00000-8990) for engine start and stop from YANMAR, if it is prepared by the buyer side. (In case of models other than 6EY18/22(A)L, refer to the sequence diagram E3-46671-6669.)
2) In order to make a good engine starting at the time of blackout situation, please carry out a mutual warming among engines (at start／stop by MDO), or the forced warming by heater unit (at direct start／stop by HFO). It is no need an engine operated with only MDO.
   Electric loading is to be carried after no load running for 5～10 minutes at the time of a cold starting including an initial starting on board.
3) The first electric loading of the sequential start for necessary devices on board after black out is to be carried out after 5 seconds of voltage establishment of AVR. If this duration is less than 5 seconds, the engine speed might not reach the rated speed or the speed of turbine is still increasing, hence an engine stall may happen in case of maximum allowable load is input.
4) The electric loading in sequential start should be carried out less than permissible loads of applied engine type (it is shown in approval drawing) and please give an interval as every 5 seconds. A momentary variation of engine is within 10%, permanent variation is within 5% and a time of stability is within 5 seconds. These are regulated by each classification society and it is necessary for 5 seconds in order that speed variation is steadied.
5) When electric loading amount becomes bigger than estimation and the momentary variation is over 10% at the first test of sequential start on board, please modify the loading setting timer of each starter and distribute the amount of load and lower the load of per step.
6) If an electric loading by three or more steps becomes necessary for a higher power generator engine, the shipping classification application of the sequential start after the blackout satisfying the electric loading plan is necessary.
   (In case of LR, since the formula of the amount of three-step loading is shown, please follow it.)
7) In addition to a over speed contact (12), a regular speed contact (13), and a low speed contact (14), the speed relay of YANMAR is equipped with the (SC) contact as an object for speed detector abnormal. The function of this SC contact is to send out an OFF signal when disconnection of the magnetic pickup for speed detection, the non-voltage of a speed relay, or burning of a speed relay is occurred.
   Therefore, please add this SC contact to the interlock at the time of starting of main generator engine. Ring gear breakage of air motor due to speed relay damage can be prevented.
   (In case of models other than 6EY18/22(A)L, only an OFF signal is sent out by the SC contact when disconnection of the magnetic pickup.)
8) There are ① engine start/stop circuit including the twice starting function circuit of air motor which prevents the starting failure by engagement failure of a ring gear at the blackout situation, ② a two-step temperature change control circuit which lowers jacket cooling-water temperature at the time of high load,(only high power engine of 6EY18(A)L series) ③ an boost air temperature heating change circuit for low load continuous running (option) , and ④ Lubricating oil priming pump automatic start/stop control circuit for engine control.
   Since the engine control panel which unified the newest circuit of each control system for option is standardized, please consider an adoption of these panels.
9) Air motor for engine starting is operated by the solenoid valve. The operation voltage is DC24V ±10%. Please select the wire with proper diameter and length in considering that the voltage is not less than DC21.6V (DC9V except 6EY18/22(A)L) due to wire loss.
10) The pressure, temperature, & level switch for each alarm and the pressure transmitter & resistance bulb for a remote indication are equipped on the engine. When occurring an alarm by the monitor, the suitable pause interval for an applied engine is required. These recommendation values are shown in a table of protection circuit, please refer it.

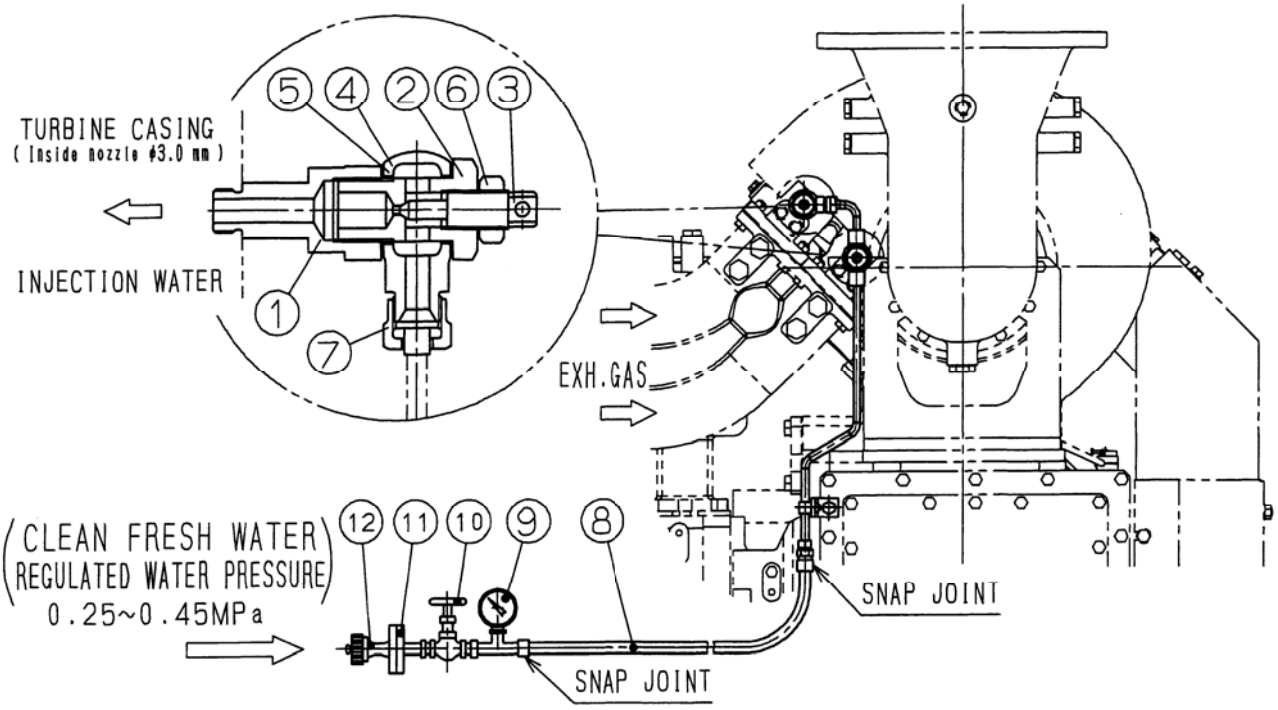

TURBINE CLEANING PROSESS (Interval:Every 50 - 200 h)

1) Connect the turbine cleaning tool ⑧ ~ ⑫ to turbine water injector by snap joint.
2) Close the valve ③ and ⑩.
3) Connect the fresh water supply line.
4) Set the temperature of the turbine inlet exhaust gas between 400℃ and 450℃.
5) Wait for approx. 10 minutes.
6) Open the valve ⑩ and start a turbine cleaning by regulating a water pressure 0.25 to 0.45 MPa.
7) Open the valve ③ for 30 seconds. Then close it.
8) Wait approx. 3 minutes until the ejected water can evaporate.
9) Repeat steps 7) and 8) three times.
10) Close the valve ③ and ⑩.
11) Run the engine at the same output for approx. 10 minutes to dry the turbocharger. Then slowly increase the engine output.
12) If you find vibrations of the turbocharger that were not there before the cleaning, do the cleaning again.
13) Remove the rubber hose.

No.	NAME
12	HOSE CONNECTION (JIS F 7335 5k-15A)
11	FLANGE (JIS 5k-15A)
10	NEEDLE VALVE
9	PRESS.GAUGE
8	DETACHABLE RUBBER HOSE

WATER FEEDING UNIT (SPECIAL TOOL 1SET/VESSEL)

No.	NAME
7	CAP NUT
6	LOCK NUT
5	PACKING
4	BALL JOINT
3	NEEDLE VALVE
2	NEEDLE VALVE CASE
1	BOSS

NOTICE

1. After cleaning, run the engine for 30 minutes or more.
2. Do not clean the compressor immediately before you stop the engine. It can cause rust.
3. You cannot remove hardened contamination with this method. Clean at regular intervals to prevent hardened contamination.

6EY22 (A) LW

CLEANING DEVICE OF TURBINE (ABB-IHI)

ヤンマー株式会社

YANMAR CO., LTD.

DWG. No. J4-50633-0120

HICAD

図面来歴 Bibliography			
No.	Date	Description	Drawn
	13/09/26	SPECIFICATIONS FOR SUPPLY	T.N
△1	13/11/20	REVISION DRAWING	T.N

御注文主
ORDERER

YANMAR CO., LTD.

御注文主
CUSTOMER

DALIAN COSCO KHI
SHIP ENGINEERING CO., LTD.

船番
SHIP No.

DE014

用途
SERVICE

6EY22(TYPE:MOUNTED ON ENGINE)
GENERATOR ENGINE CONTROL
&
LO PRIMING PUMP PANEL

6EY22ALW x 1120kW

HANSHIN ELECTRIC MFG CO.,LTD.
TEL. 06(6473)0861
FAX. 06(6473)0959
E-mail : design@hdk-mfg. co.jp
4-7 2-CHOME HIMESATO
NISHIYODOGAWA-KU
OSAKA JAPAN 555-0025

Approved	A. MATSUNAGA	Rule	LR-UMS
Checked	A. MATSUNAGA	Paint. Color	7.5BG7/2
Drawn	T. NISHIZAWA	Date	2013/09/26
DRAWING NO.	1309-052		

APPLIED RULES & REGULATIONS	LR-UMS, IEC, JIS, JEM	AMBIENT TEMPERATURE	45℃
DRAWING & DOCUMENT	WRITTEN IN ENGLISH	PROTECTION DEGREE OF THE ENCLOSURE	IP44
COLOR	OUT : MUNSELL NO. 7.5BG7/2 WITH LUSTER IN : MUNSELL NO. 7.5BG7/2 WITH LUSTER		
COLOR IDENTITY OF BUS BAR	R-(U): RED P: RED S-(V): WHITE N: BLUE T-(W): BLUE	SEEING FROM PANEL FRONT [LEFT / TOP / FRONT] TO [RIGHT / BOTTOM / REAR]	
NAME PLATE	MATERIAL : ACRYLITE LETTERS : ENGLISH & CHINESE (BLACK GROUND, WHITE LETTERS)		
CAUTION PLATE	MATERIAL : ACRYLITE LETTERS : ENGLISH & CHINESE (RED GROUND, WHITE LETTERS)		
CONNECTION DIAG. PLATE	PRINTED PAPER ENCLOSED IN PLASTIC CARD CASE		
UNIT	SI		
TERMINAL	SOLDERLESS TYPE : AMP		
SPARE PARTS	LR RULE REQUIREMENT & MAKER STANDARD or ORDER SPECIFICATIONS BOX : MADE OF STEEL MAKER STANDARD PAINT COLOR : SILVER(MAKER ST'D)		
	GEN ENG CONTROL PANEL & LOCAL CONTROL PANEL	LO PRIMING PUMP STARTER	
SOURCE	AC220V 60HZ 1Φ DC24V (RIPPLE : 2VP-P LESS)	AC440V 60HZ 3Φ	
CONTROL VOLT	DC24V / AC24V 60HZ 1Φ	AC24V 60HZ 1Φ	
INDICATION LAMP	LED DC2.8V FOR ECSU LED DC24V APX510-24* / AP1M122 FOR ENG CONT PANEL / LOCAL CONTROL PANEL	LO PUMP STARTER LED AC/DC24V(APX510-24W)	
FUSE	UTSUNOMIYA ELE TYPE: NC0 RATED BREAK CURRENT AC500V 20KA	UTSUNOMIYA ELE TYPE:UC1 RATED BREAK CURRENT AC500V 50KA	
INNER WIRING	SOURCE : SYP-0.6/1KV UL1015-600V (AWG16) CONTROL : UL1015-600V (AWG18/20) UL1007-300V (AWG20)	MAIN : SYP-0.6/1KV CONTROL: UL1015-600V (AWG18)	

4	5	6			FILE NO. 001-ESP
1	2	3			

株式会社 阪神電機製作所 HANSHIN ELECTRIC MFG. CO., LTD.	TITLE SPECIFICATIONS	DWG. NO. 1309-052-01	GS

FULL / ST'D

SHEET NO. (1)

NOTICE / CONSTRUCTION MANUAL

1. Please do not perform a MEGGER test of the ENGINE CONTROL PANEL.
   If a megger test should be required, then proced as follows before performing the test:
   1) Disconnect all the ECSU-AM1 connectors.
   2) Likewise, disconnect all the connector cables from the speed relay and AC/DC converter.
   If a megger test is destroyed, resulting in a failure of the equipment.

   機関制御盤のメガーテストは行わないで下さい。
   もしメガーテストを行なう必要がある場合は,テストする前に次の通りに進めてください。
   1)ECSU-AM1のコネクターは全て外してください。
   2)同様に、スピードリレー及び AC/DC コンバーターの接続電線は全て外して下さい。
   コネクター及び配線を外さずメガーテストを行なうと絶縁が破壊されその機器が故障します。

2. Before switching on the power for the first time, check that the cables for the specified voltage are connected to the specified terminals, with the polarity correctly selected.

   最初の電源投入時は規定された端子に規定電圧の線が接続されているか、又極性が正常であるか
   確認してから電源スイッチを ON にして下さい。

3. To avoid malfunction of the engine, do not try maniqulating the ECSU-AM1 DIP switches (SW1-1～4, SW2-1～8). If they are accidentally operated, then put the switch positions back to the original state in accordance with the connection diagram.
   Failure to do so may causethe engine control panel to operate differently from its intended action, failing to meet the function requirements.

   ECSU-AM1のデップスイッチ (SW 1-1～ , SW 2-1～8) は誤動作を避ける為、触らないで下さい。
   誤まって触った時は、接続図を見て元に戻してください。
   本来の目的と異なる動作を起こし機能を満足しない事に成ります。

4. If the CPU does not automatically reset for hours after occurrence of CPU trouble (although it is equipped with a resetting function inside), then turn off the power swwitch and this may normally reset the CPU.
   If normal resetting cannot be attained, contact the maker for repairs.

   CPU の異常発生時、CPU 内部にリセット機能が装備されておりますが長時間自己復帰しない場合は
   電源スイッチを OFF にしてリセットして下さい、正常復帰する場合があります。
   正常復帰しない場合はメーカーに修理依頼を行なって下さい。

5. Contact signals that are output from the ECSU-AM1 to the Main Switch Board and Alarm Monitoring System should be used in the DC24V cirecuit irrespective of the value of load current.
   Do not use the output circuit for MSB and AMS, for the AC circuit of the control panel.
   To do so may destroy the insulation. Therefore, if it is used for the AC circuit, then it is necessary to install a relays outside the ECSU-AM1 to allow operation under AC110/220V.

   Resister load (抵抗負荷) : DC30V 1A
   Induction load (誘導負荷) : DC30V 0.2A (to be used with surge absorber / サージキラー装備の事)

   ECSU-AM1 より主配電盤及びアラームモニタリングシステムに出力している接点信号は電流値に係わらず
   DC24V の回路でご使用願います。
   MSB 及び AMS 用に出力している回路をAC回路の制御盤に転用しないで下さい、絶縁が破壊されます。
   AC回路で使用する場合は ECSU-AM1 外にリレーを設けてAC110/220V で運用出来る様にする必要があります。

6. insulsate the MAGNETIC PICK-UP shied wire using a vinyl tape to avoid grounding.
   When the shield wire is grounded, theN-phase earth is detected on the monitor device side.

   マグネテックピックアップのシールド線は地絡しない様にビニールテープ等で絶縁して下さい。
   シールド線が地絡すると N 相のアースが監視器側に検出されます。

7. A connection diagram is supplied only for one unit of engine because the circuit of each engine is identical to each other.

   接続図は各機関に於いて回路が同じである為、1台分を記載しています。

HANSHIN ELECTRIC MFG. CO., LTD.

CONTROL & MONITORING OF GENERATOR ENGINE

SUBSECTION	ITEM	LOCAL (LOCAL CONTROL PANEL) OPERATION	LOCAL INDICATION	LOCAL CONTROL		GEN ENGINE CONT PANEL (BY YANMAR) OPERATION	CONTROL	INDICATION			ENG CONT CONSOLE (BY DOCK) OPERATION	INDICATION	ALARM(VISU.&AUDI.)		MAIN SWITCH BOARD (BY DOCK) OPERATION	CONTROL	INDICATION	ALARM(VISU.&AUDI.)		REMARKS
CONTROL & SAFETY	ELECTRIC POWER					○		○												
	ENGINE START (AUTO/MANU)	○					○								○	◎				◎ AUTOMATIC
	ENGINE STOP (MANU)						○								○					Ⓐ LOCAL ⟷ REMOTE & AUTO
	MECHANICAL ENG MANUAL STOP	▢																		
	CONTROL POSITION & MODE	Ⓐ	Ⓐ					Ⓐ							Ⓑ		○			Ⓑ AUTO ⟷ MANU
	READY TO START		○					○									Ⓒ			Ⓒ WITH AUTO ST/BY
	ENGINE RUN							○				○					○			
	SAFETY S/DOWN: OVER SPEED						○	○					○							
	SAFETY S/DOWN: LO LOW PRESSURE						○	○					○					○		
	SAFETY S/DOWN: H/T FW HIGH TEMPERATURE						○	○					○							
	MANUAL EMERGENCY STOP						○	○			○		○							
	START FAILURE						○	○					○					○		
	START FAILURE & SHUTDOWN RESET	▢																		▢ FO HANDLE TO STOP POSITION
	ALARM REPOSE											○								
	SAFETY S/DOWN OF HARD WIRE SYSTEM						○						○							
PRESSURE	LO ENGINE INLET (LOW)											○	○							
	H/T FW ENGINE INLET (LOW)											○	○							
	FO ENGINE INLET (LOW)											○	○							
	STARTING AIR ENGINE INLET (LOW)											○	○							
	CONTROL AIR ENGINE INLET (LOW)												○							
	LO STRAINER DIFF PRESSURE (HIGH)												○							
TEMPERATURE	LO ENGINE INLET (HIGH)											○	○							
	H/T FW ENGINE OUTLET (HIGH)											○	○							
	EXH GAS T/C INLET (HIGH)											②	②							② 2POINT/ENGINE
LEVEL	FO HIGH PRESSURE PIPE LEAK (LEAK)												○							
	LO SUMP TANK (LOW)												②							
	FW EXPANSION TANK (LOW)												Ⓓ							Ⓓ DOCK SUPPLY
	FO DAILY SERVICE TANK (LOW)												Ⓓ							
OTHER	ELECTRIC POWER FAILURE												○							
	CONTROL/SAFETY CPU FAULT												○							
	LO PRIMING PUMP START/STOP	○		⊗																⊗ LO PRIM PUMP CONT CIRCUIT ONLY (LOCAL CONTROL PANEL MAIN CIRCUIT ONLY)
	LO PRIMING PUMP RUN		○									○								
	LO PRIMING FAILURE		○										○							
	LO PRIMING PUMP EMERGENCY STOP															Ⓔ				Ⓔ FIRE SAFETY STOP FUNCTION
	ENGINE STOP MV FAULT							○												
	SPEED DETECTOR ABNORMAL							○					Ⓕ							Ⓕ SHUTDOWN SYSTEM FAILURE (ONE COMMON ALARM IND)
	LO L/P S/DOWN SENSOR FAULT							○												
	FW H/T S/DOWN SENSOR FAULT							○												
	ENG TACHO-METER		Ⓖ																	Ⓖ GAGE BOARD (MOUNTED ON ENGINE)
	FO VISCOSITY (HIGH/LOW)											Ⓓ	Ⓓ							

GS

DWG. NO. 1309-052-03

SHEET NO. (3)

TITLE DISPLAY TABLE

株式会社 阪神電機製作所 HANSHIN ELECTRIC MFG. CO., LTD.

FILE NO. 003-ED1

EY22

ST D

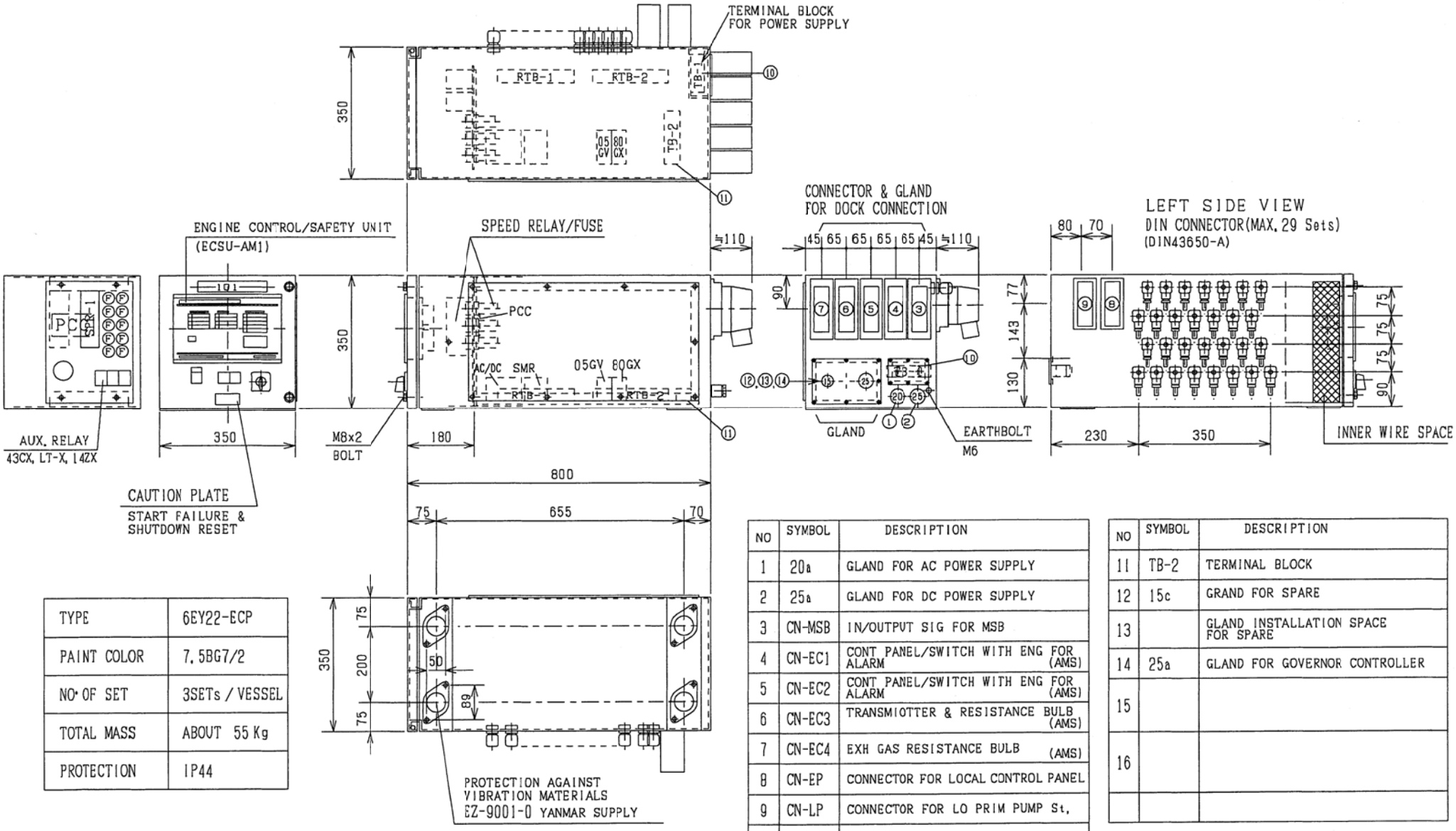

TYPE	6EY22-ECP
PAINT COLOR	7.5BG7/2
NO. OF SET	3SETs / VESSEL
TOTAL MASS	ABOUT 55 Kg
PROTECTION	IP44

NO	SYMBOL	DESCRIPTION
1	20a	GLAND FOR AC POWER SUPPLY
2	25a	GLAND FOR DC POWER SUPPLY
3	CN-MSB	IN/OUTPUT SIG FOR MSB
4	CN-EC1	CONT PANEL/SWITCH WITH ENG FOR ALARM (AMS)
5	CN-EC2	CONT PANEL/SWITCH WITH ENG FOR ALARM (AMS)
6	CN-EC3	TRANSMIOTTER & RESISTANCE BULB (AMS)
7	CN-EC4	EXH GAS RESISTANCE BULB (AMS)
8	CN-EP	CONNECTOR FOR LOCAL CONTROL PANEL
9	CN-LP	CONNECTOR FOR LO PRIM PUMP St.
10	TB-1	TERMINAL BLOCK FOR AC/DC POWER

NO	SYMBOL	DESCRIPTION
11	TB-2	TERMINAL BLOCK
12	15c	GRAND FOR SPARE
13		GLAND INSTALLATION SPACE FOR SPARE
14	25a	GLAND FOR GOVERNOR CONTROLLER
15		
16		

3	4		6EY22	FILE NO. 004-EPO	株式会社 阪神電機製作所 HANSHIN ELECTRIC MFG. CO., LTD.	TITLE ENGINE CONTROL PANEL	DWG. NO. 1309-052-04	0V
1	2						

FULL SPEC

SHEET NO. (4)

TOP SIDE VIEW

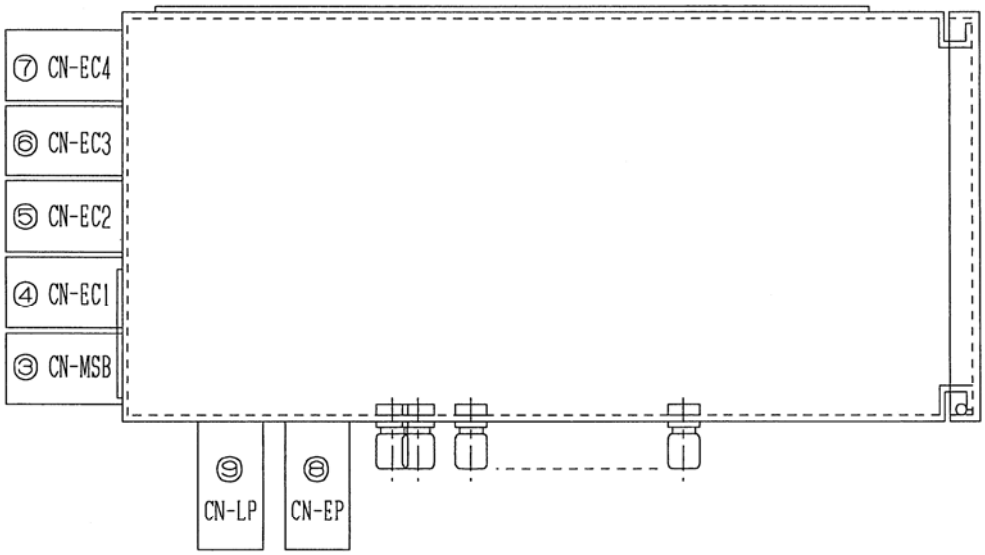

LEFT SIDE VIEW

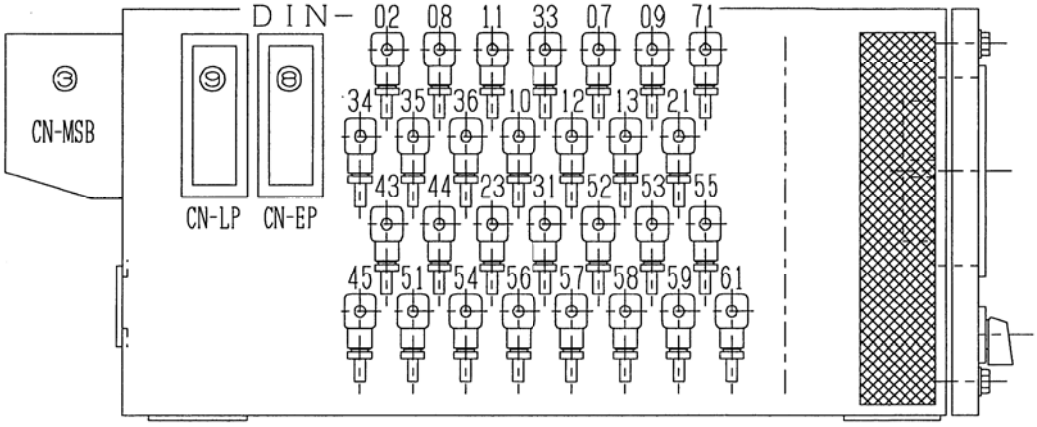

DIN CONNECTOR(MAX. 29 Sets)
(DIN43650-A)

DWG. NO.	1309-052-05
TITLE	ENGINE CONTROL PANEL
株式会社 阪神電機製作所 HANSHIN ELECTRIC MFG.CO.,LTD.	
FILE NO.	005-EPO
6EY22	
0V	

SHEET NO. (5)

FULL SPEC

ENGINE CONTROL / SAFETY UNIT

POWER & LOCATION	
WL	CONTROL / SAFETY POWER
WL	REMOTE / AUTO
WL	LOCAL
WL	

OPERATION	
BL	READY TO START
GL	ENGINE RUN
RL	START FAILURE
RL	MANUAL EMERGENCY STOP

SAFETY SHUTDOWN	
RL	OVER SPEED
RL	LO LOW PRESSURE
RL	H/T FW HIGH TEMPERATURE
RL	
RL	

CPU RUN
- ○ CONTROL
- ○ SAFETY

SHUTDOWN SYSTEM FAILURE
- ○ ENG STOP MAGNETIC VALVE
- ○ SPEED DETECTOR
- ○ LO PRESSURE SENSOR
- ○ H/T FW TEMPERATURE SENSOR
- ○
- ○
- ○

HANSHIN ELECTRIC MFG. CO., LTD. TYPE:ECSU-AM1

(PB-LT)
LAMP TEST

(WL-A) (WL-D)
A C POWER | D C POWER

(SW)
ON
OFF
AC/DC POWER

DWG. NO.	1309-052-06
SHEET NO.	(6)
	0V
TITLE	PARTS ARRANGEMENT OF ENGINE CONTROL PANEL
株式会社 阪神電機製作所 HANSHIN ELECTRIC MFG. CO., LTD.	
FILE NO.	006-EPA
	6EY22
ST D	

NO.	SYMBOL	NAME PLATE (LETTER)			NOTICE	SIZE	Q'TY
101		GENERATOR ENGINE CONTROL PANEL 柴油发电机组控制盘				150x30	3
CNP		CAUTION 警告 SHUTDOWN CONDITION RESET IS DONE BY FO HANDLE MOVING TO THE STOP POSITION. 将燃料手柄置于停机位置 可实现紧急停机的复位				50x40	3
	WL-A	AC	POWER			20.8x20.8	3
	WL-D	DC	POWER			↓	↓
	PB-LT	LAMP	TEST			30x15	↓
	SW	ON OFF AC/DC POWER				48x48	3
200		LOCAL CONTROL PANEL 柴油发电机组操作盘			SEE SHEET NO.27	90x20	3
301		G/E LO PRIMING PUMP 柴油发电机组润滑油注油泵			SEE SHEET NO.29	100x30	3

5	6	7	8	FILE NO.
1	2	3	4	007-NPT

株式会社 阪神電機製作所 HANSHIN ELECTRIC MFG.CO.,LTD.	TITLE NAME PLATE TABLE	DWG.NO. 1309-052-07	NP

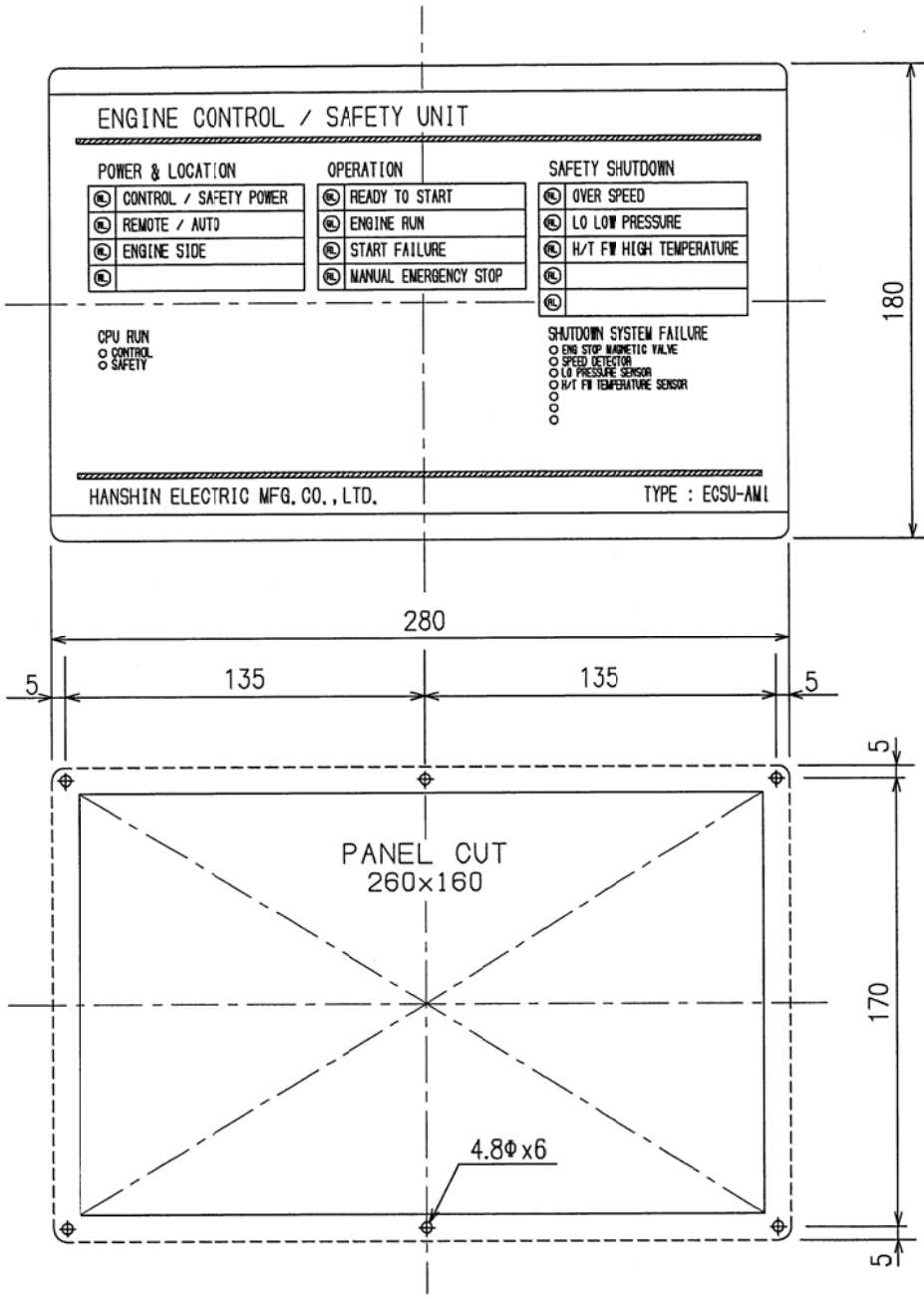

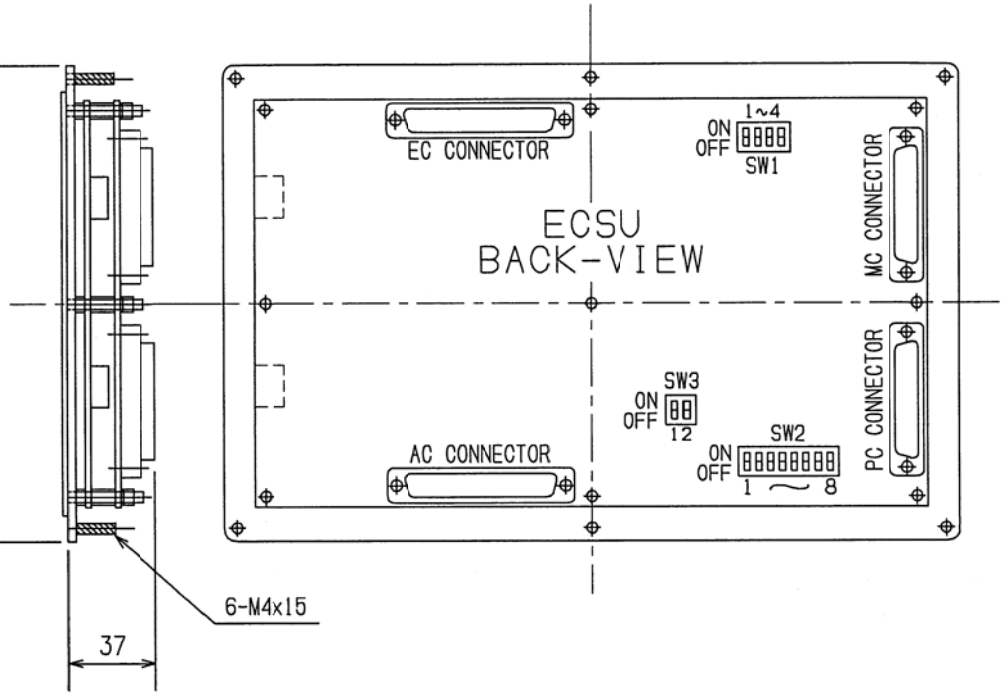

SPECIFICATION

1. TYPE : ECSU-AM1
2. PROTECTION : IP44 (FRONT SIDE ONLY)
3. SOURCE CAPACITY : DC24V/25W (LIMIT 18~32V)
4. CIRCUMSTANCE TEMP. : +5~+70℃
   (CONSTRUCTION MANUAL -15~+70℃)
5. OUTPUT CAPACITY : OUTPUT VOLTAGE : DC24V 1.5A
   OUTPUT CONTACT
   RESISTER LOAD : DC30V 1.0A
   INDUCTION LOAD : DC30V 0.2A
   (USE WITH SURGE ABSORBER)
6. RESPONSE TIME : LESS THAN 2 SECONDS.
7. MASS : 1.6Kg
8. CLASS TYPE APPROVAL

CLASS	CERTIFICATE NO.	CLASS	CERTIFICATE NO.	CLASS	CERTIFICATE NO.
NK	TA12232M	GL	45106-07HH	ABS	09-Y0488908-PDA
LR	07/10017(E1)	BV	19327/A0 BV	RINA	ELE349010PU
KR	KOB00045-AC001	DNV	A-12634	CCS	DB10T00098

NOTICE

1. PLEASE DO NOT PERFORM MEGGER TEST OF ECSU-AM1.
2. DON'T DO DIELECTRIC STRENGTH TEST.
3. SUPPLY DC SOURCE AFTER TOOK OFF RIPPLE (LESS THAN 2V P-P)
4. CONFIRM POLARITY OF POWER SOURCE BEFORE POWER-ON OPERATION.
5. DON'T TOUCH DIP SWITCHES (SW1-1~4, 2-1~8) ON ECSU TO AVOID MALFUNCTION. IF TURN THEM BY MISTAKE, TURN BACK ACCORDING TO CONNECTION DIAGRAM.

6	6	7	8	6EY18L(AL) 6EY18LW(ALW)	FILE NO. 007-ECS	株式会社 阪神電機製作所 HANSHIN ELECTRIC MFG.CO.,LTD.	TITLE ENGINE CONTROL/SAFETY UNIT	DWG.NO. 1309-052-08	0V
1	2	3	4						

SHEET NO. (8)

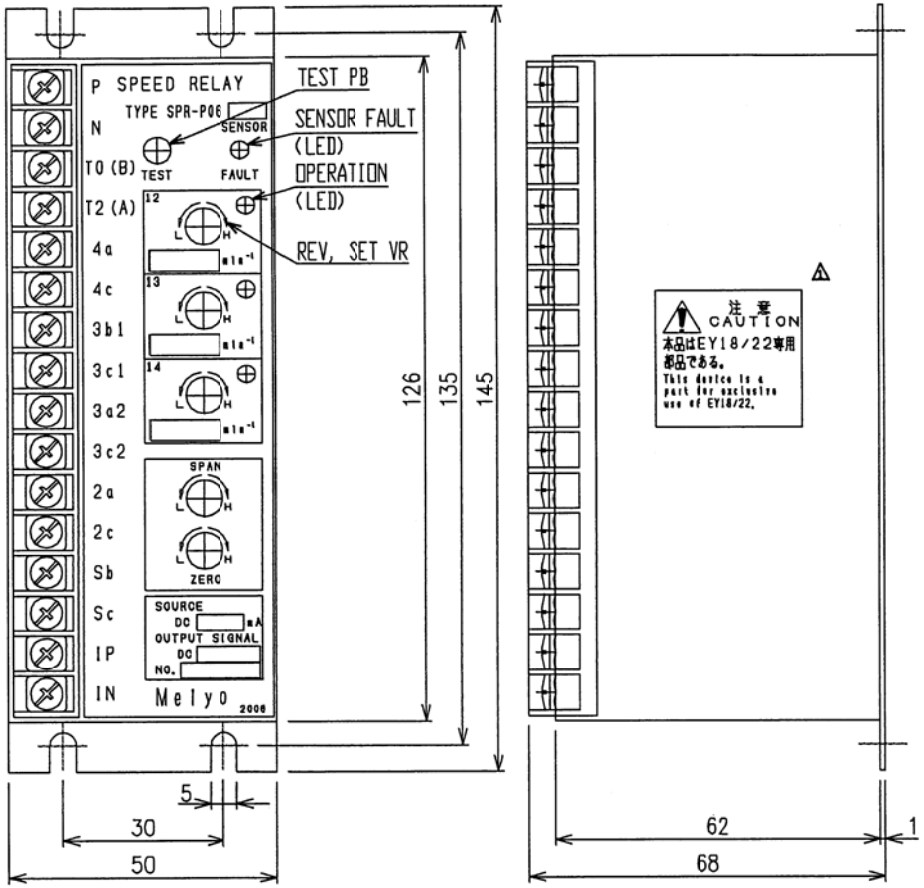

OPERATION MANUAL

1. GENERAL

ONE SPEED RELAY DETECTS 3 POSITIONS OF REVOLUTION AND DETECTOR FAULT. AND, IT ALLOWS CONNECTING REVOLUTION INDICATOR.

2. OPERATION

(a) SPEED DETECTION: INPUT SIGNAL IS NUMBER OF FREQUENCY PULSE FROM THE MAGNETIC REVOLUTION DETECTOR SET ON THE ENGINE.

(b) SIGNAL CONVERTING, AMPLIFICATION?TO DETECT FREQUENCY WHICH IS IN PROPORTION TO REVOLUTION AND CONVERT TO DC VOLTAGE WHICH IS IN PROPORTION TO FREQUENCY BY FREQUENCY-VOLTAGE CONVERTER. TO AMPLIFY THIS DC VOLTAGE, AND OUTPUT AS VOLTAGE SIGNAL.

(c) COMPARISON WITH BASIC VOLTAGE?THE OUTPUT RELAY WORKS AND LED LIGHTS ON AT INPUT SIGNAL BECOMES HIGHER THAN BASIC VOLTAGE.

3. ADJUSTMENT

(a) TO TURN THE ADJUSTMENT VOLUME TO CCW, OPERATING POINT DOWN. TO TURN THE ADJUSTMENT VOLUME TO CW, OPERATING POINT UP.

(b) KEEP AN ENGINE REVOLUTION AT OPERATING POINT. TURN THE ADJUSTMENT VOLUME SLOWLY FROM HIGH POSITION TO LOW POSITION AND STOP AT LED LIGHTS ON AND FIX IT.

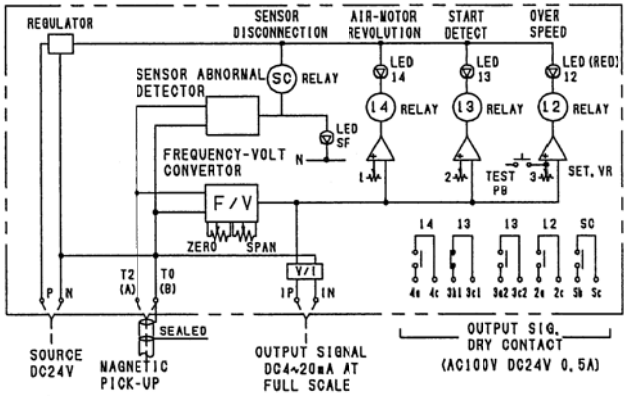

OPERATION OF SC DRY CONTACT
1) NORMAL :ON
ABNORMAL:OFF
2) DETECTOR FAULT :OFF
3) NO VOLTAGE :OFF
4) CIRCUIT BOARD BLOKEN :OFF

SPECIFICATIONS

1. CONSTRUCTION: ALL OF THE PARTS ARE ON THE PRINTED CIRCUIT BOARD IN THE STEEL CASE. THE PRINTED CIRCUIT BOARD IS CONSTRUCTED WITH ELECTRIC PARTS ETC. AND HAS HIGHT RELIANCE.
2. CONTACT OUTPUT: CONTACT ITEM(14:AIR-MOTOR REV. DETECTION, 13?START REV. DETECTION 12:OVER SPEED DETECTION, SC?DETECTOR FAULT)
   CONTACT CAPACITY(AC100V/DC24V 0.5A)
3. SOURCE: DC24V, 2.2W(OPERATION LIMIT DC18~32V)
4. MEASURING TOLERANCE: ±1.0% at F.S.
5. CIRCUMSTANCE TEMP.: -15~70℃
6. CASE SURFACE? BC PLATE

NOTES

1. FIX THIS DEVICE IN A PANEL. CONNECT WIRES OF ELECTRIC SOURCE AFTER CONFIRM THE POLE.
2. SUPPLY DC SOURCE AFTER TOOK OFF RIPPLE(LESS THAN $2V_{p-p}$).
3. SHORT ALL OF THE TERMINALS BEFORE DO INSULATION TEST. DON'T PUT OVER DC500V.
4. DON'T DO DIELECTRIC STRENGTH TEST.
5. DO THE TEST BY TEST PUSH BUTTON AT CONSTANT ENGINE REVOLUTION.
6. OPEN THE TERMINALS, WHICH ARE NOT USED.
7. USE A SEALED WIRE CABLE FOR CONNECTING FROM REVOLUTION DETECTOR TO THIS DEVICE. OUTPUT SIGNAL LINE CONNECT SEALED LINE TO THE TERMINAL OF "T0(B)". UN-CONNECTION OR MISS-CONNECTION CAUSES MISS-FUNCTIONS.
8. DON'T CONNECT SEALED LINE TO THE EARTH OF THE HULL, JUNCTION BOXES, PANELS OR DEVICES AND KEEP ISOLATED FROM THEM BY ISOLATOR FOR EXAMPLE VINYL TAPE. LOOSING THIS MATTER, IT CAUSES DEVICE ERROR OR FIRE.
9. DON'T MOVE THE ZERO AND SPAN ADJUSTMENT VOLUME. THEY ARE PRE-ADJUSTED.
10. "SC" DRY CONTACT CLOSE AT NORMAL CONDITION, AND OPEN AT NO VOLTAGE, DETECTOR FAULT, AND CIRCUIT BOARD BLOKEN.

CLASS TYPE APPROVAL

TYPE	CLASS	Certificate No.	REMARKS	CLASS	Certificate No.	REMARKS
SPR-P06V or SPR-P06I	NK	TA06188M		KR	TKY00137-MS005	
	LR	99/10028(E2)		ABS	07-Y0213567-PDA	
	CCS	DB09T00032		RINA	ELE416910PU	
	GL	33685-06HH				

TYPE · SPR-P06I

SPEED RELAY FOR EY18/22 (FOR MAGNETIC PICK-UP)

ヤンマー株式会社
YANMAR CO., LTD.

DWG. No. B3-00009-524E △

ENGINE SIDE START OPERATION

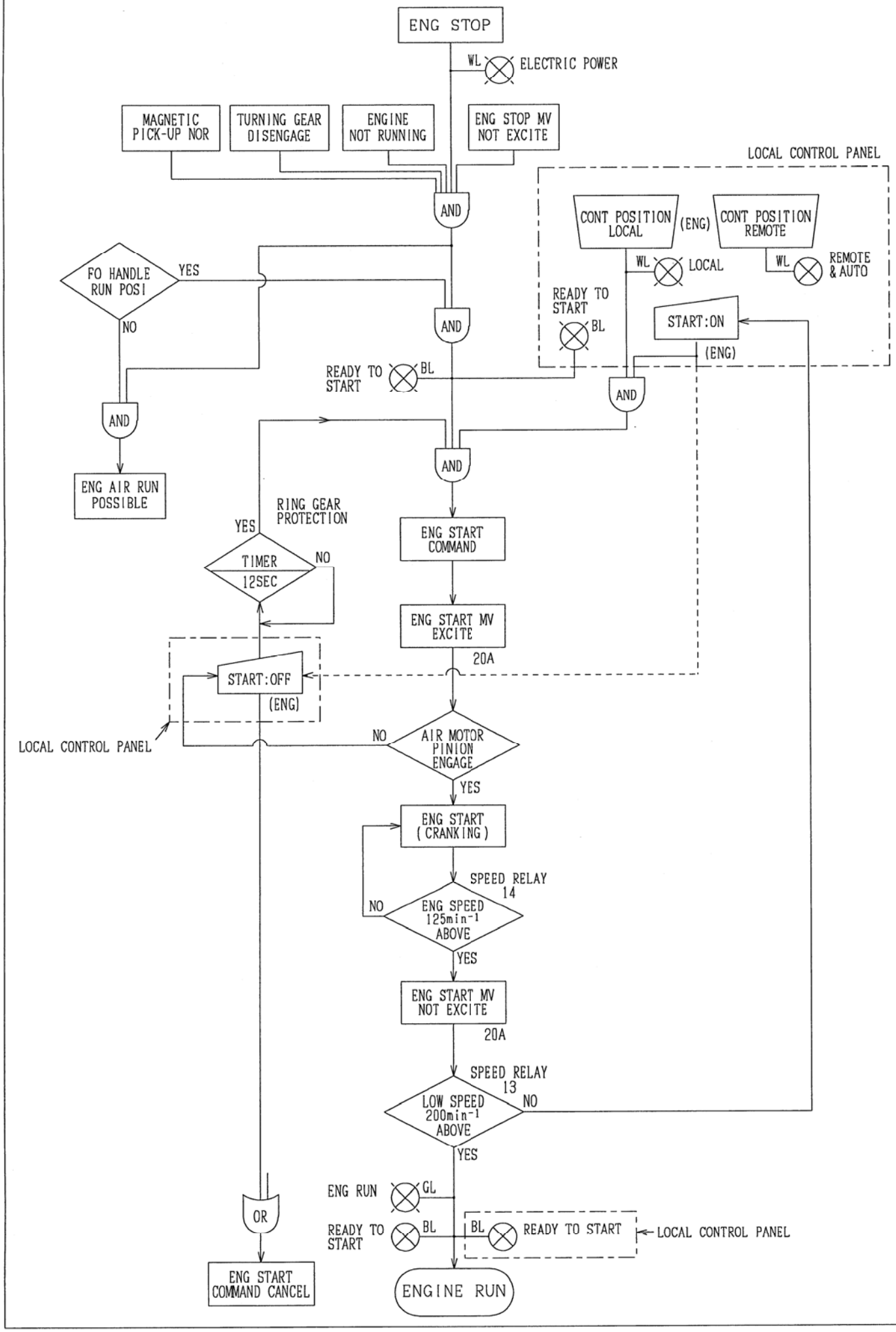

DWG. NO.	1309-052-10
TITLE	OPERATION FLOW CHART
株式会社 阪神電機製作所 HANSHIN ELECTRIC MFG. CO., LTD.	
FILE NO.	010-EF1
6EY22	
SHEET NO.	(10)
FL	
FULL / ST' D	

ENGINE AIR RUN OPERATION (ENG SIDE)

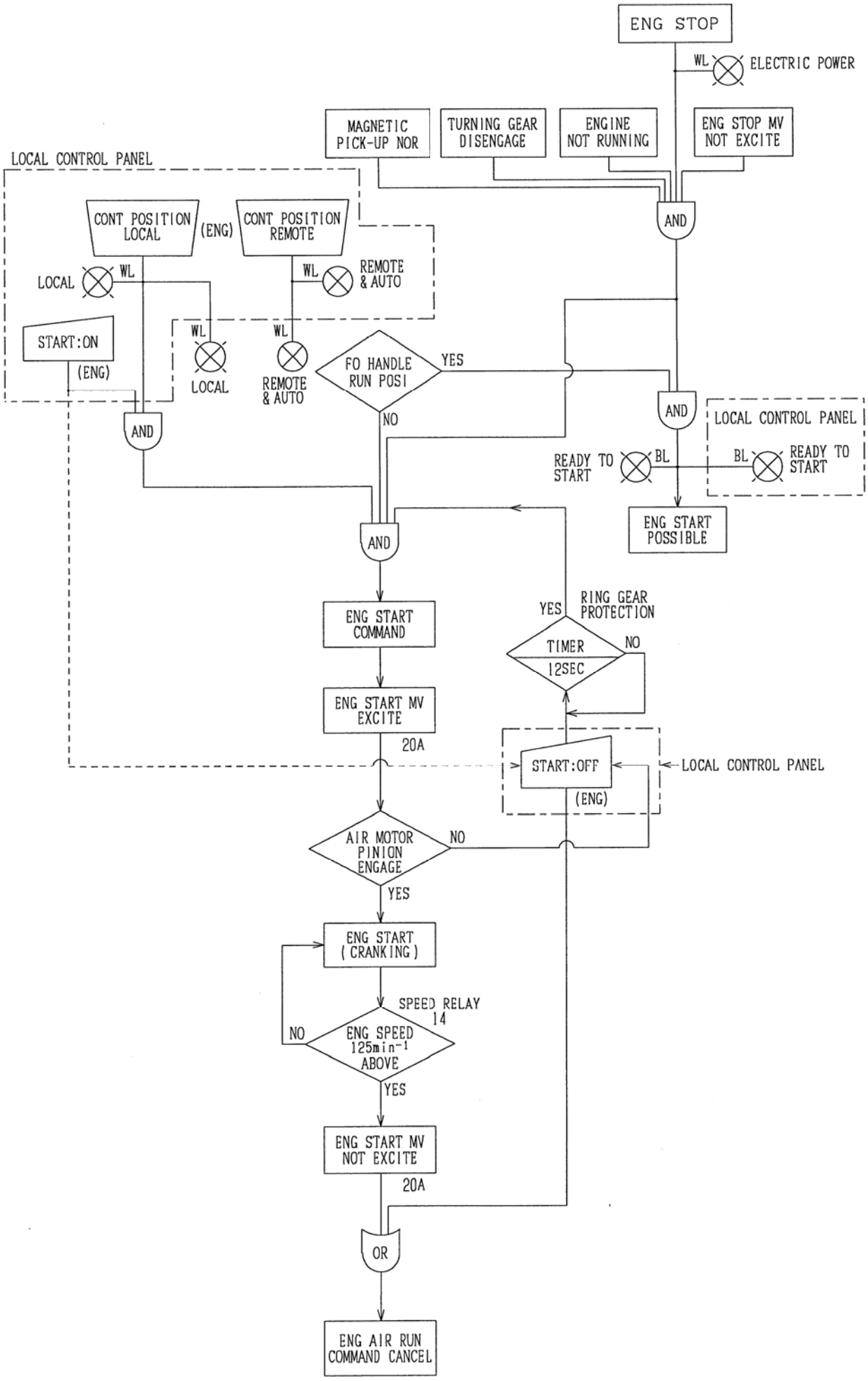

FL	
DWG. NO.	1308-008-11
SHEET NO.	(11)
TITLE	OPERATION FLOW CHART
株式会社 阪神電機製作所 HANSHIN ELECTRIC MFG. CO., LTD.	
FILE NO.	011-EF2
6EY22	
FULL / ST'D	

REMOTE/AUTO START OPERATION
(1ST CRANKING SPEED 125min⁻¹ ABOVE)

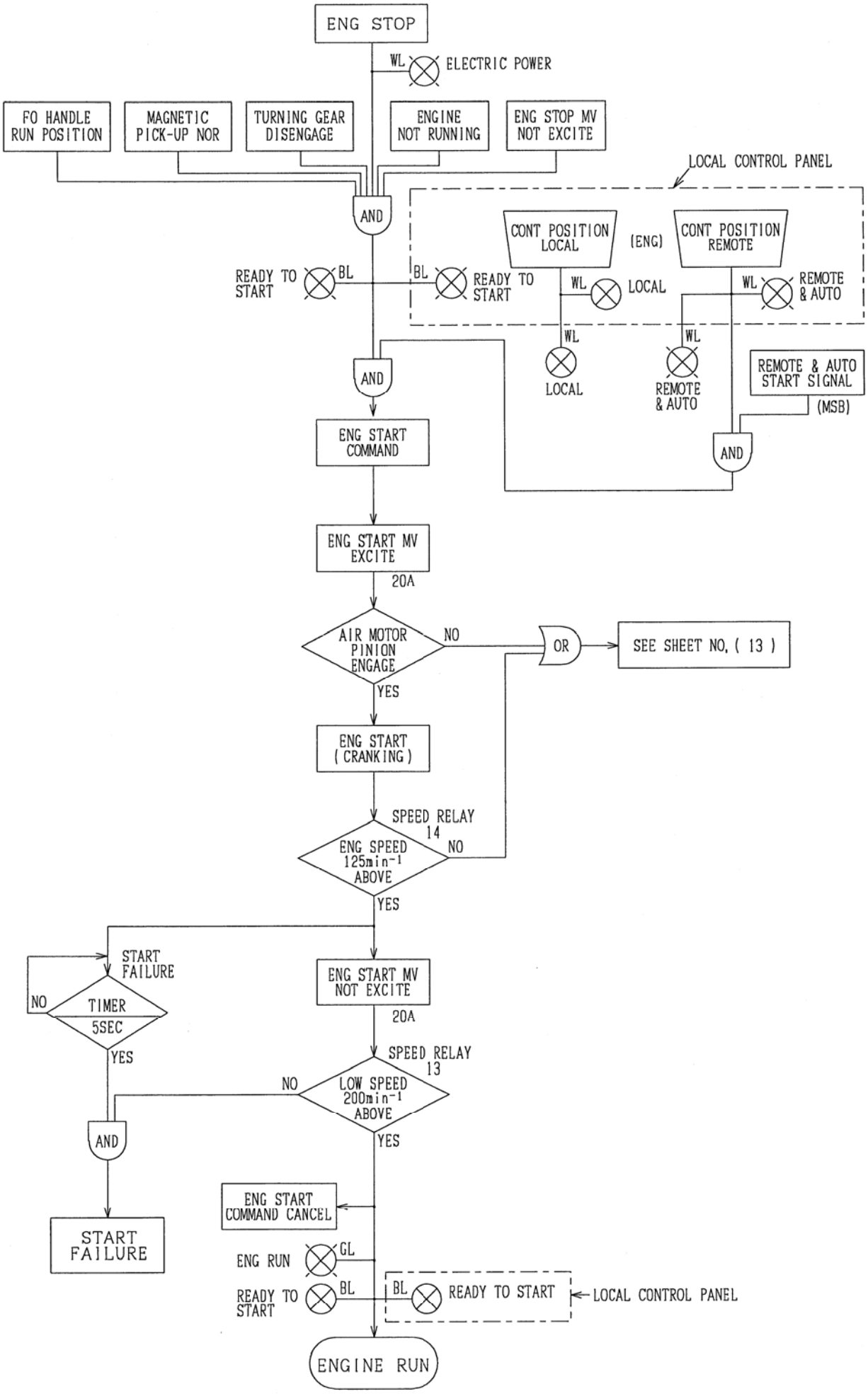

FL	
DWG. NO.	1309-052-12
SHEET NO. (12)	
TITLE	OPERATION FLOW CHART
株式会社 阪神電機製作所 HANSHIN ELECTRIC MFG. CO., LTD.	
FILE NO.	012-EF3
6EY22	
FULL / ST" D	

REMOTE/AUTO START OPERATION
(1ST CRANKING SPEED 125min⁻¹ LESS)

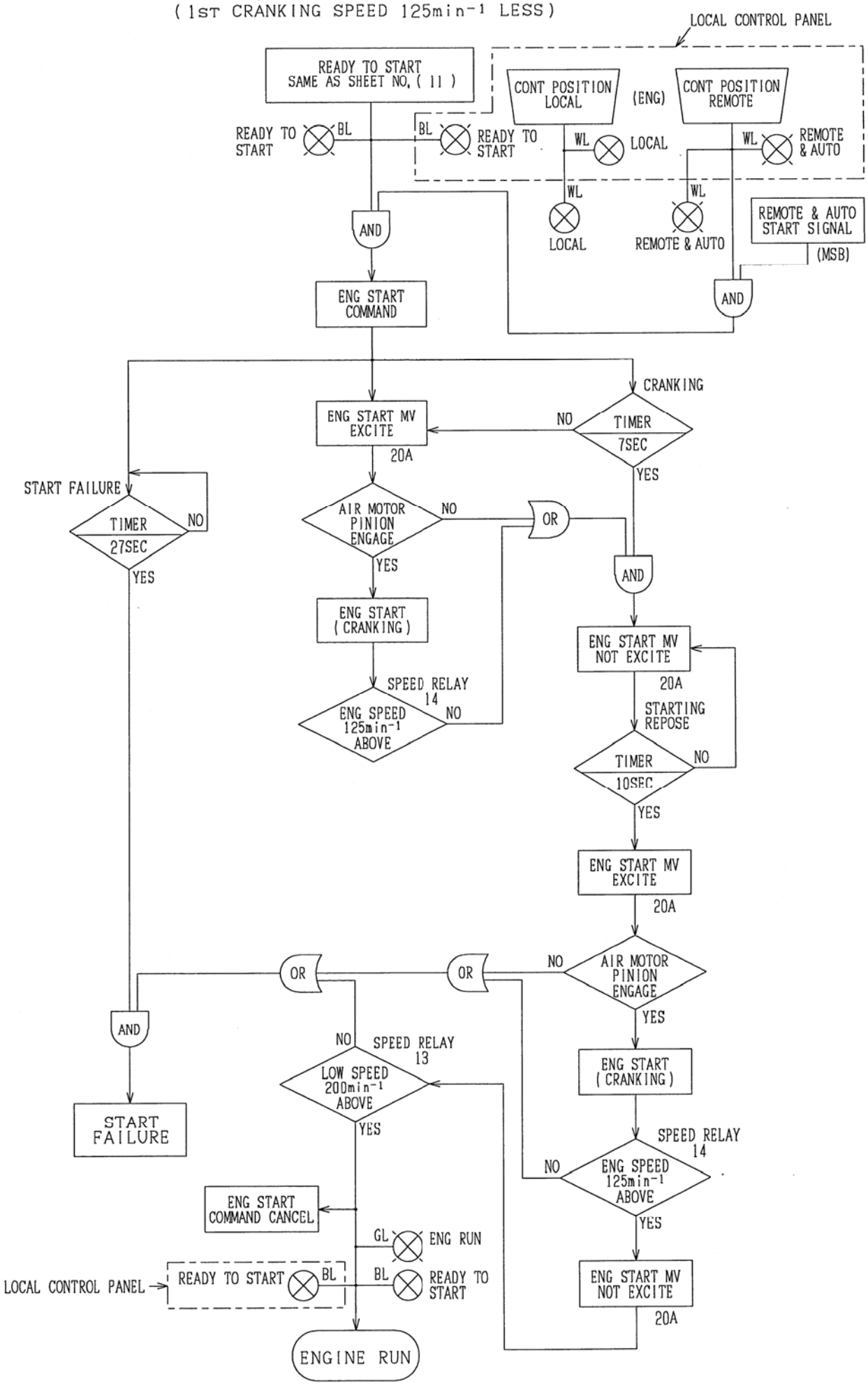

DWG. NO.	1309-052-13
SHEET NO.	(13)
TITLE	OPERATION FLOW CHART
株式会社 阪神電機製作所 HANSHIN ELECTRIC MFG. CO., LTD.	
FILE NO.	013-EF4
6EY22	
FULL / ST'D	

START FAILURE OPERATION

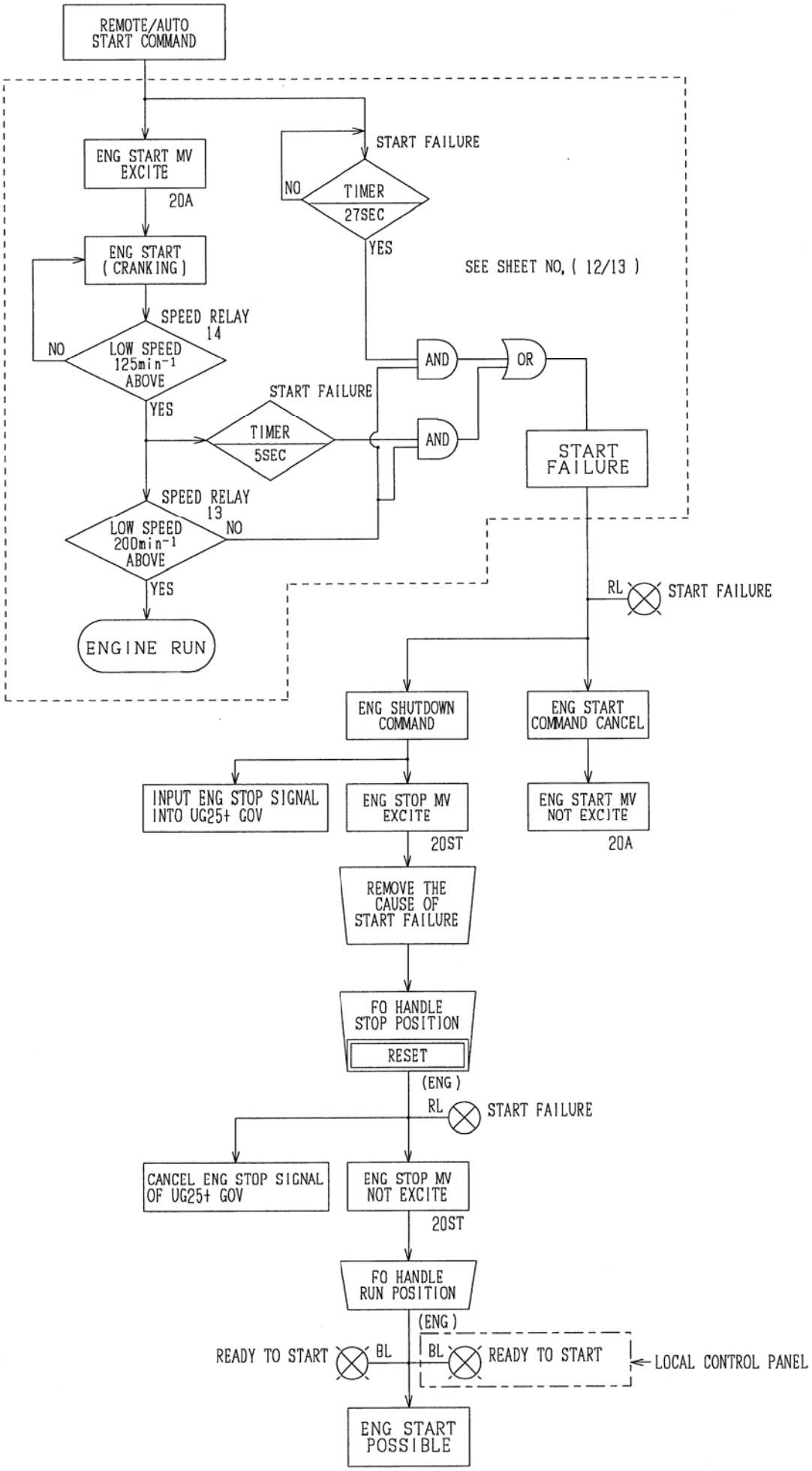

DWG. NO.	1309-052-14
TITLE	OPERATION FLOW CHART
株式会社 阪神電機製作所 HANSHIN ELECTRIC MFG. CO., LTD.	
FILE NO.	014-EF5
	6EY22
SHEET NO. (14)	FL

FULL / ST D

ENGINE MANUAL STOP OPERATION

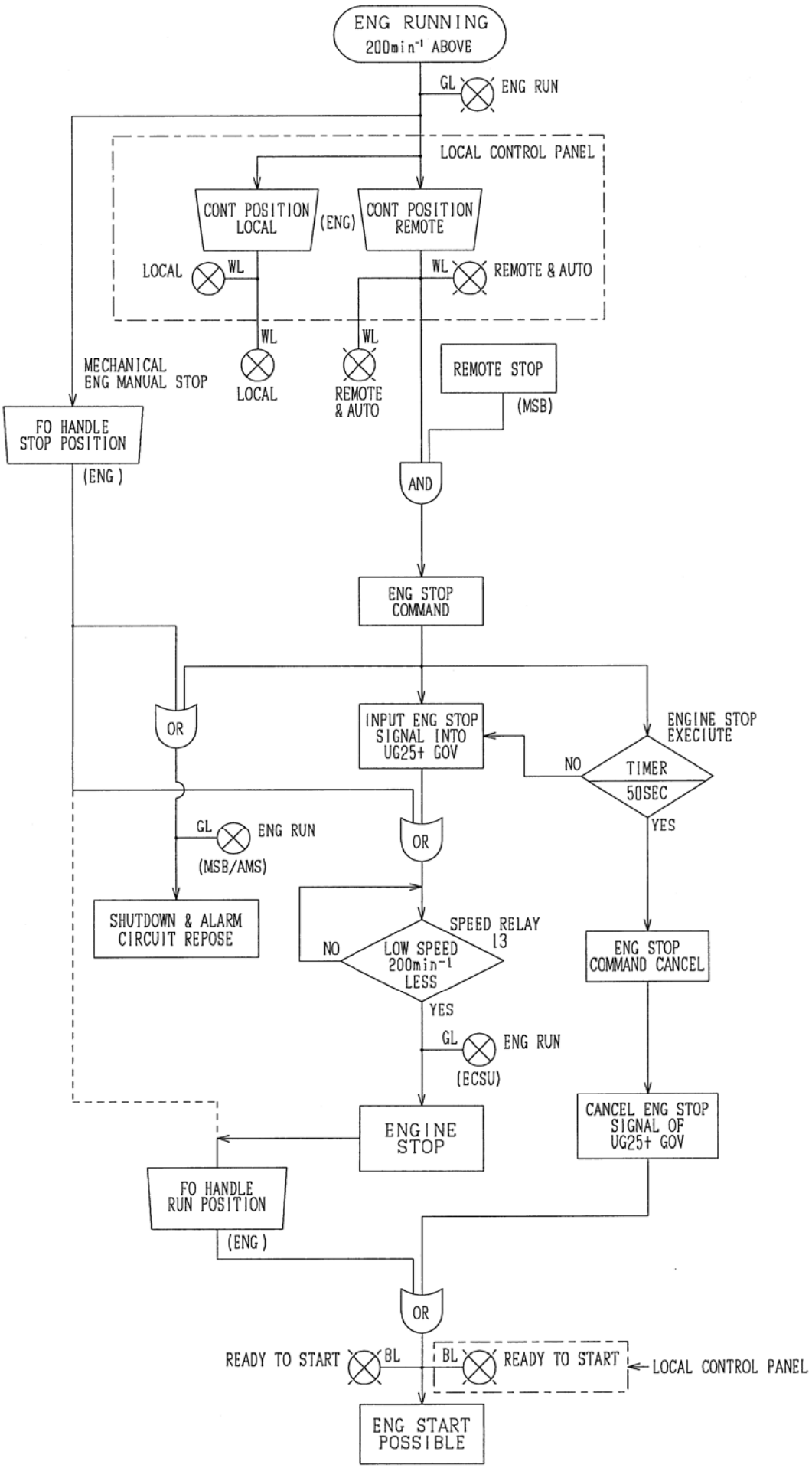

DWG. NO.	1309-052-15
TITLE	OPERATION FLOW CHART
株式会社 阪神電機製作所 HANSHIN ELECTRIC MFG. CO., LTD.	
FILE NO.	015-EF6
6EY22	
FL	
SHEET NO. (15)	
FULL / ST' D	

ENGINE SHUTDOWN (TRIP) & ALARM ORGANIZE OPERATION

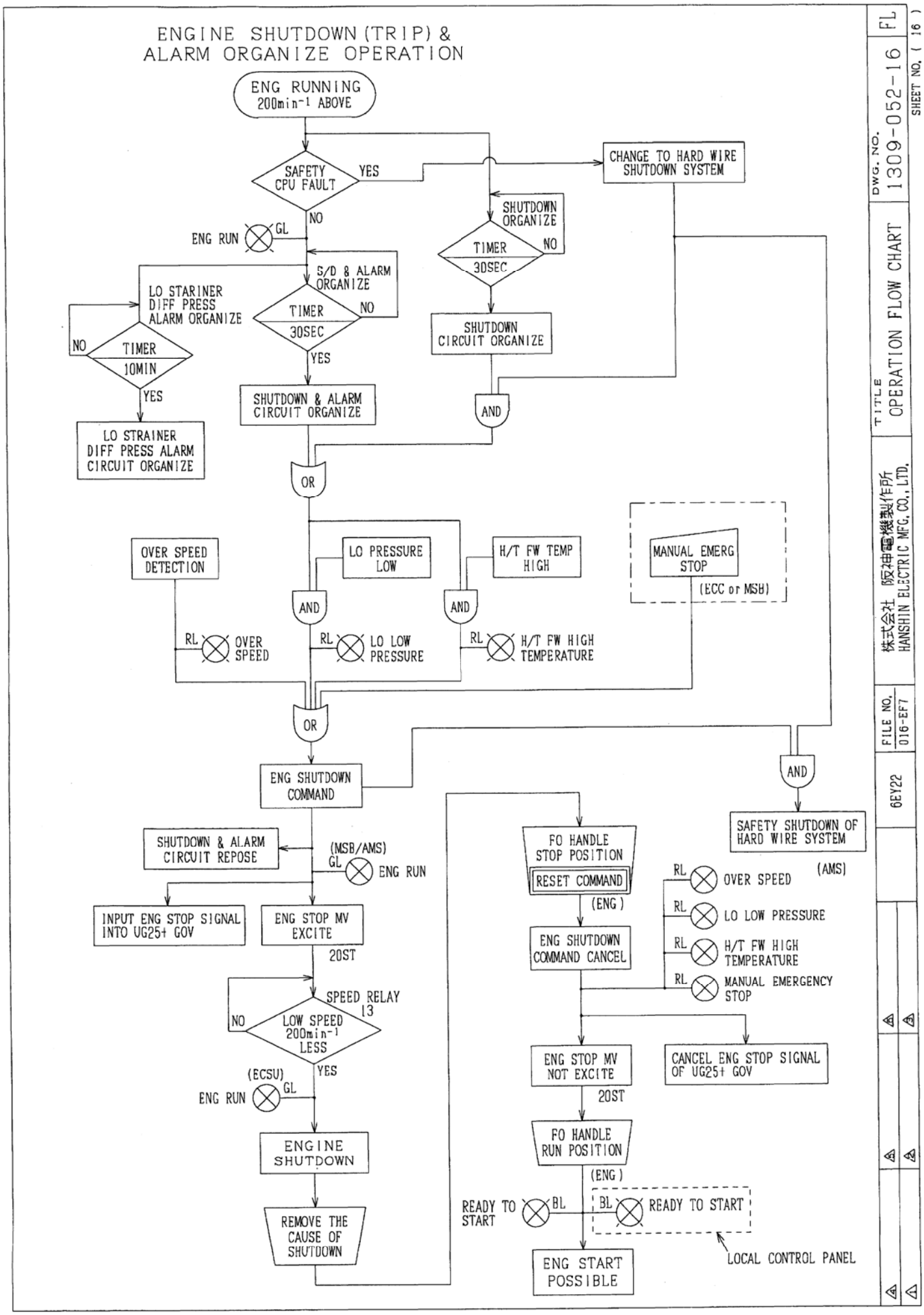

DWG. NO.	1309-052-16
SHEET NO.	(16)
FL	
TITLE	OPERATION FLOW CHART
株式会社 阪神電機製作所 HANSHIN ELECTRIC MFG. CO., LTD.	
FILE NO.	016-EF7
6EY22	
ST D	

SPEED DETECTOR ABNORMAL
(TACHO FAILURE)

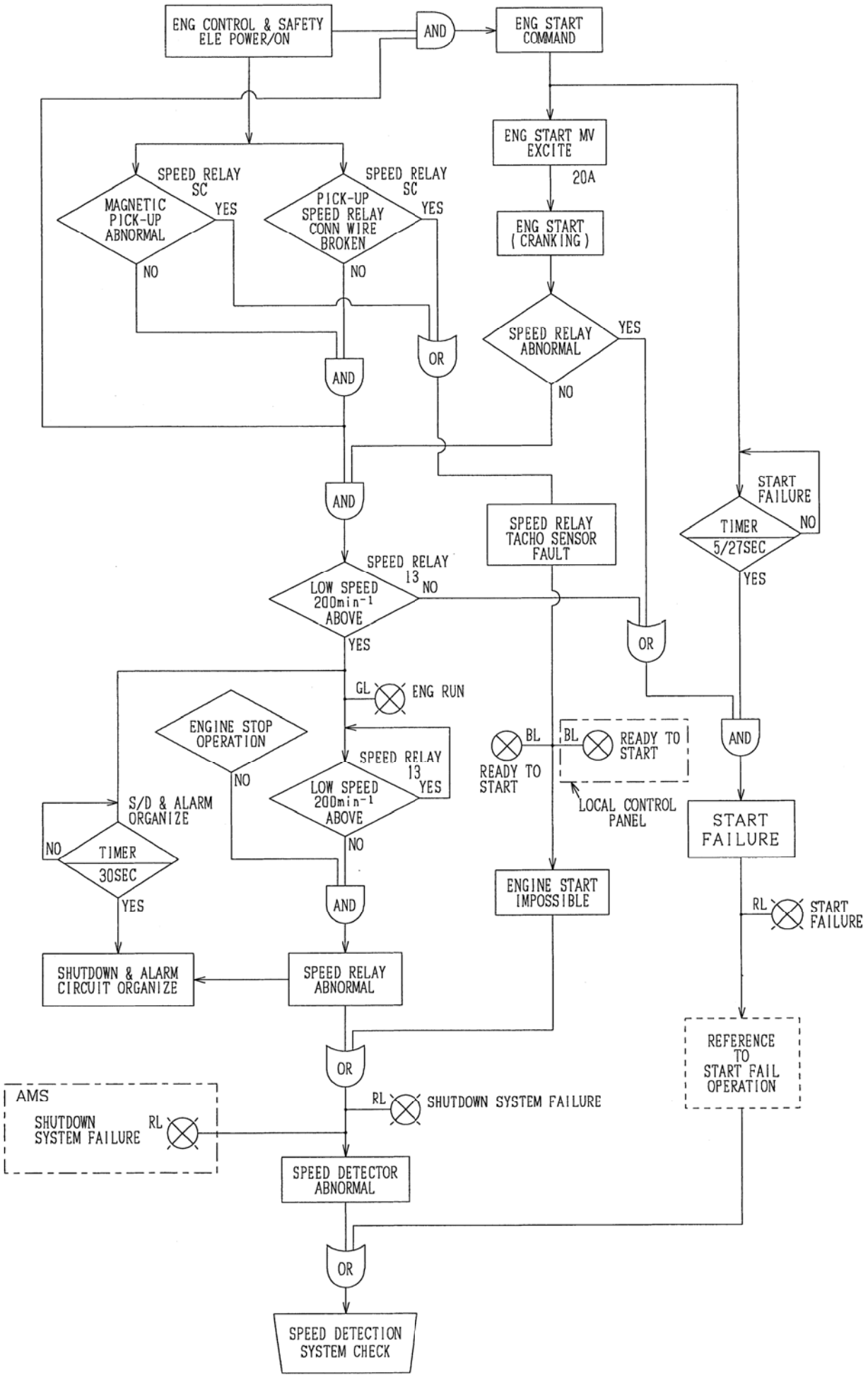

FL	
DWG. NO.	1309-052-17
TITLE	OPERATION FLOW CHART
株式会社 阪神電機製作所 HANSHIN ELECTRIC MFG. CO., LTD.	
FILE NO.	017-EF8
6EY22	

SHEET NO. (17)

FULL / ST D

SHUTDOWN SENSOR FAULT
(WIRE BREAK)

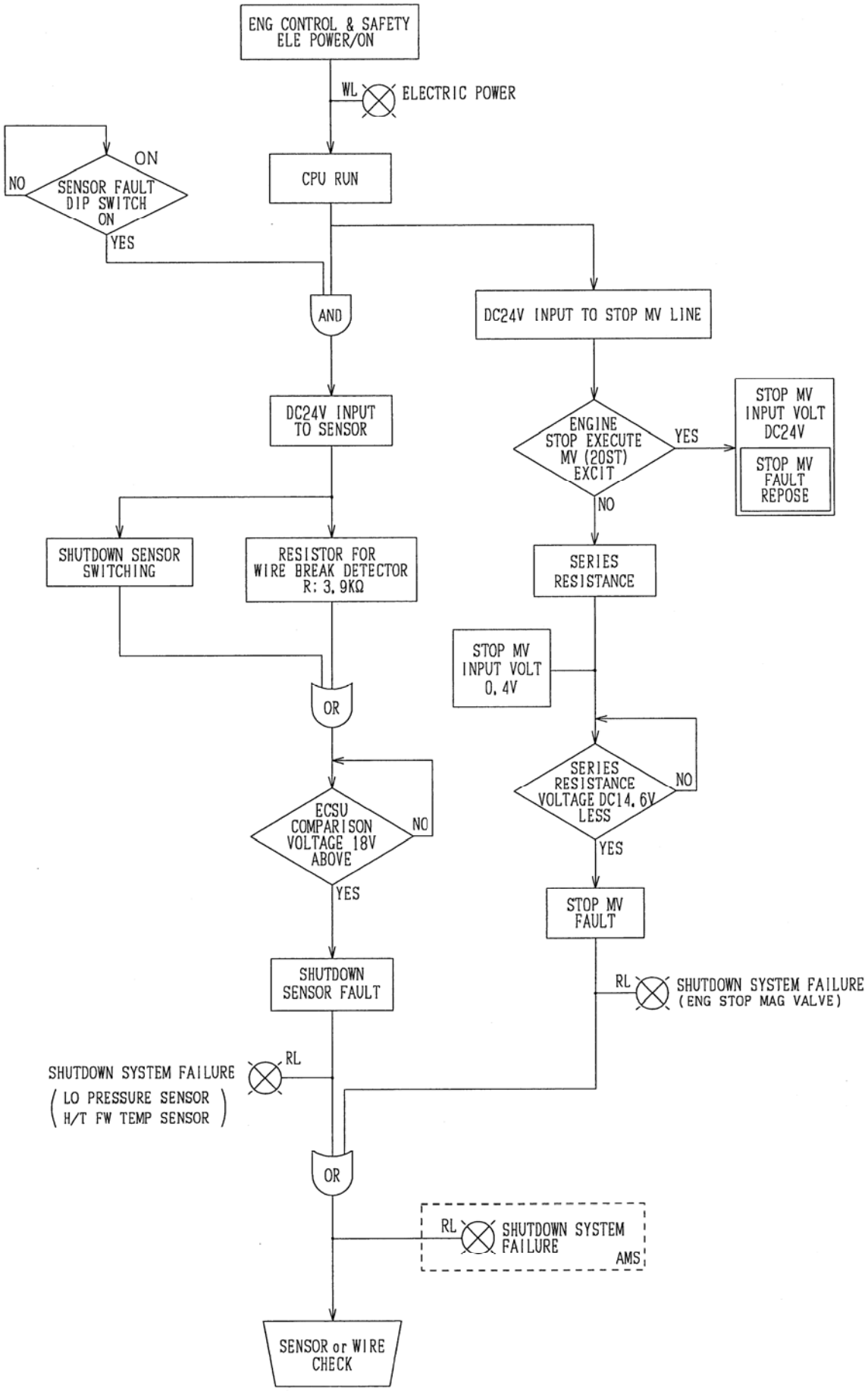

FL	
DWG. NO.	1309-C52-18
SHEET NO.	(18)
TITLE	OPERATION FLOW CHART
株式会社 阪神電機製作所 HANSHIN ELECTRIC MFG. CO., LTD.	
FILE NO.	018-EF9
6EY22	
ST D	

ENGINE LO PRIMING PUMP OPERATION (LOCAL CONTROL PANEL)

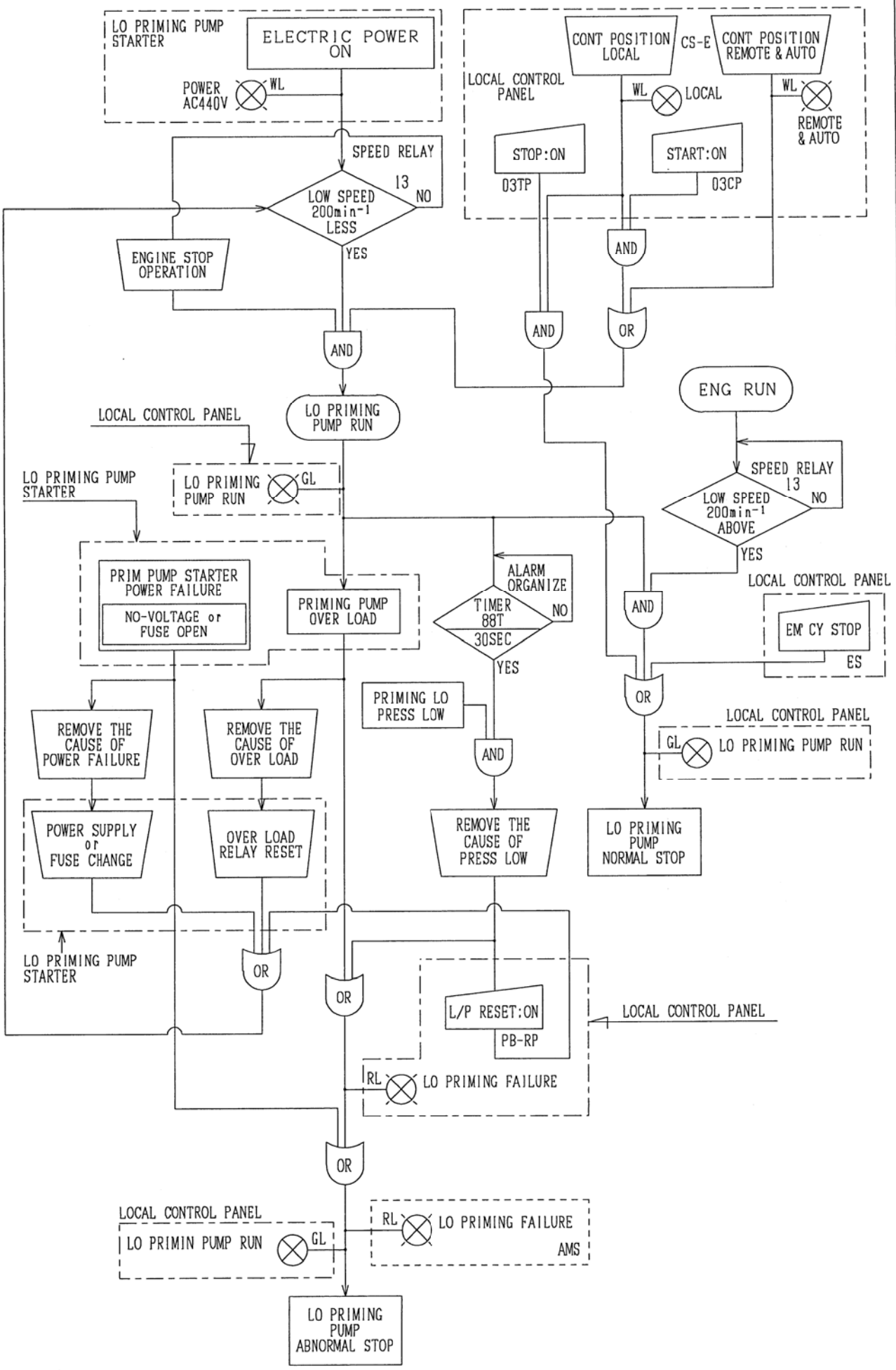

FL	
DWG. NO.	1309-052-19
TITLE	OPERATION FLOW CHART
株式会社 阪神電機製作所 HANSHIN ELECTRIC MFG. CO., LTD.	
FILE NO.	019-EF10
	6EY22
SHEET NO.	(19)
FULL / ST'D	

SYMBOL	DESCRIPTION
	DISCONNECTION SWITCH
	MAIN CIRCUIT BRAKER
	AC VOLTAGE TRANSFORMER
	AC CURRENT TRANSFORMER
	DC CURRENT TRANSFORMER
	FUSE
	DIODE
	CONDENSER
	RESISTOR
	ADJUSTABLE RESISTOR
	TERMINAL
	CABLE
	CONNECTED CABLE
	NOT CONNECTED CABLE
	SHIELD
	SHIELD CABLE
	EARTH
M	AC MOTOR

SYMBOL	DESCRIPTION
	RELAY & TIMER COIL
	THERMAL RELAY
	THERMAL RELAY WITH REACTOR
V	AC VOLTAGE METER
A	AC CURRENT METER
V	DC VOLTAGE METER
A	DC CURRENT METER
h	HOUR METER
	INDICATOR LAMP
	INDICATOR LAMP WITH TRANS
	LED
	HORN
	BELL
	BUZZER
	MAGNET MAIN N/O CONTACT
	MAGNET MAIN N/C CONTACT
	AUX RELAY N/O CONTACT
	AUX RELAY N/C CONTACT
	COMBINATION CONTACT

SYMBOL	DESCRIPTION
	ON TIME DELAY N/O CONTACT
	ON TIME DELAY N/C CONTACT
	OFF TIME DELAY N/O CONTACT
	OFF TIME DELAY N/C CONTACT
	FLICKER RELAY N/O CONTACT
	FLICKER RELAY N/C CONTACT
	MECHANICAL N/O CONTACT
	MECHANICAL N/C CONTACT
	CHANGE OVER SWITCH
F	SELECTOR SW N/O CONTACT
F	SELECTOR SW N/C CONTACT
F	SELECTOR SW AUTO RETURN N/O CONTACT
F	SELECTOR SW AUTO RETURN N/C CONTACT
E	PUSH BUTTON MOMENTARY N/O CONTACT
E	PUSH BUTTON MOMENTARY N/C CONTACT
E	PUSH BUTTON MOMENTARY LAP N/O CONTA
E	PUSH BUTTON MOMENTARY LAP N/C CONTA
	MANUAL RESET N/O CONTACT
	MANUAL RESET N/C CONTACT

4	5	6			FILE NO. 020-ESY
1	2	3			
株式会社 阪神電機製作所 HANSHIN ELECTRIC MFG. CO., LTD.	TITLE ELE SYMBOL DESCRIPTION		DWG. NO. 1309-052-20		CN

FULL / ST' D

SHEET NO. (20)

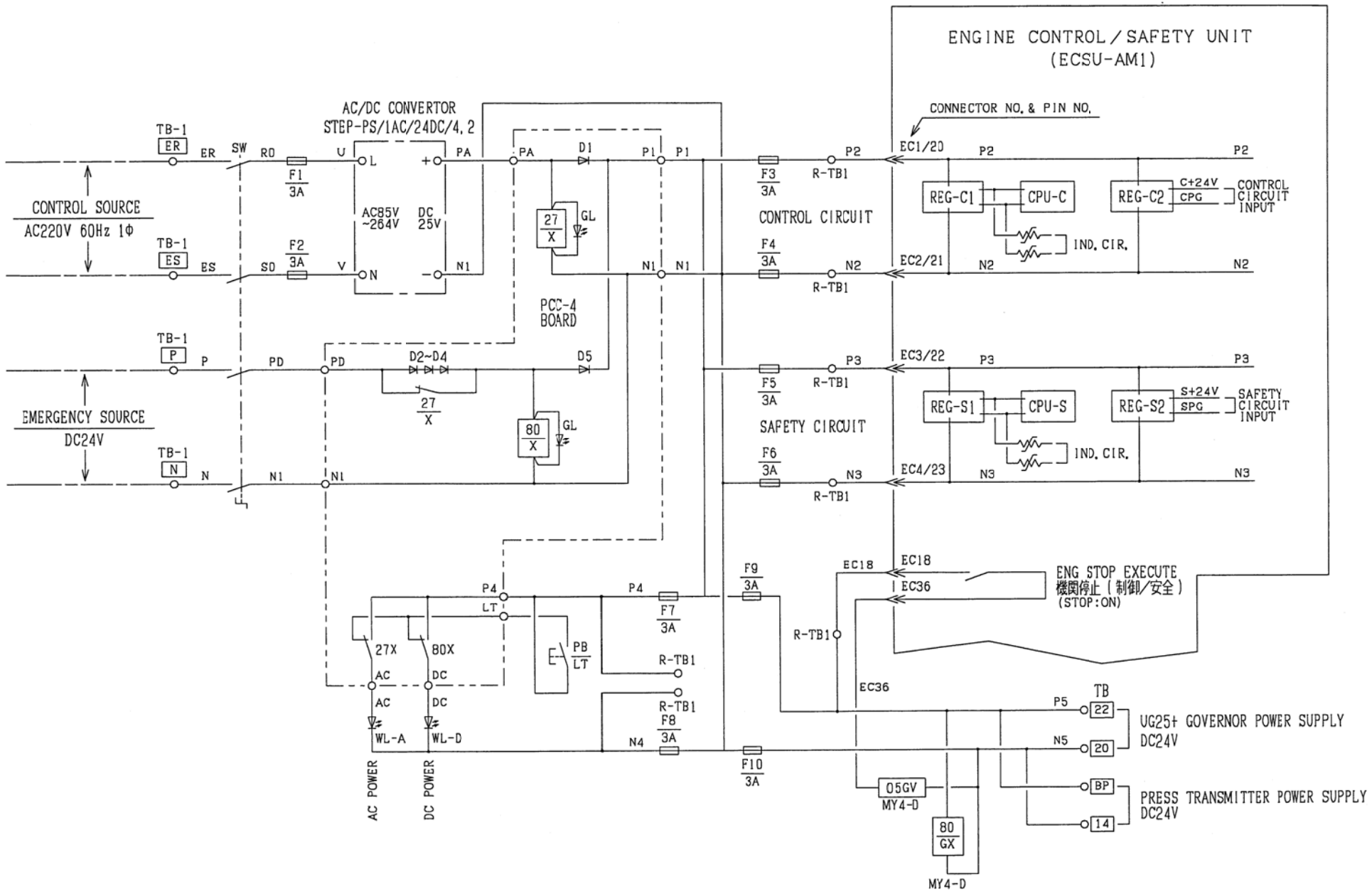

4	4	4		6EY22	FILE NO. 021-ECP	株式会社 阪神電機製作所 HANSHIN ELECTRIC MFG. CO., LTD.	TITLE GENERATOR ENGINE CONTROL PANEL	DWG. NO. 1309-052-21	CN
1	2	3							

ST' D

SHEET NO. (21)

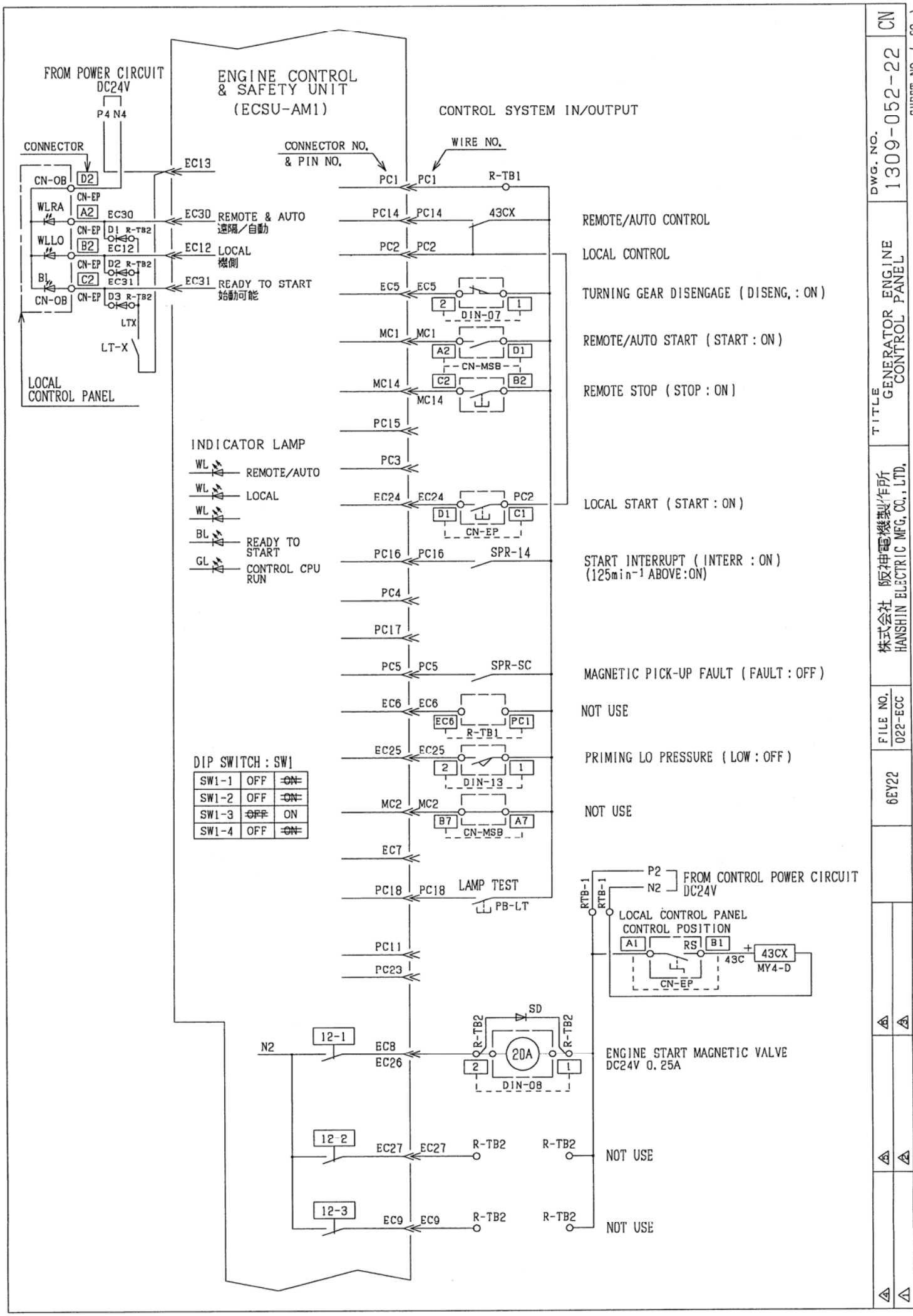

SW1-1	OFF	~~ON~~
SW1-2	OFF	~~ON~~
SW1-3	~~OFF~~	ON
SW1-4	OFF	~~ON~~

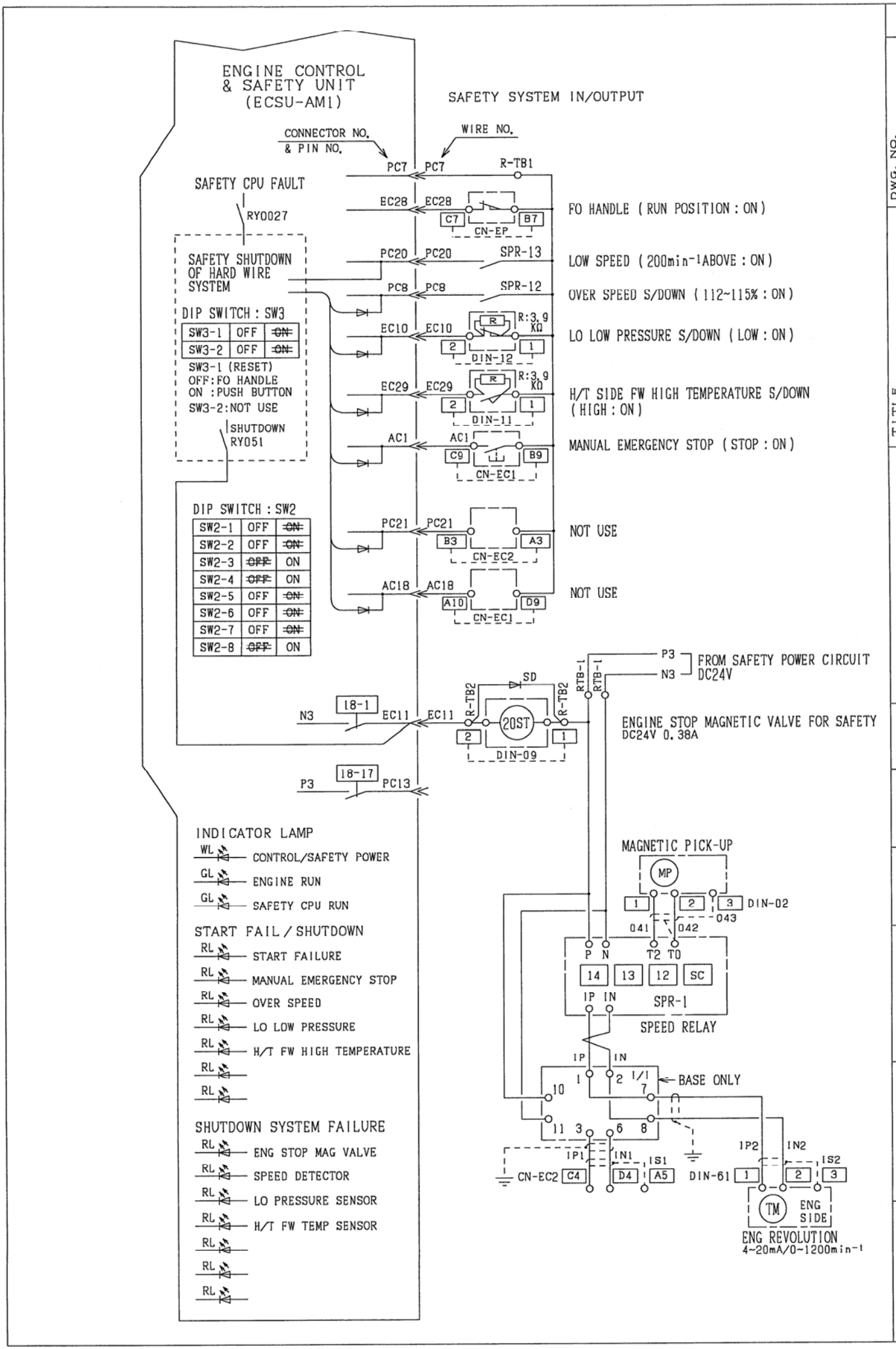
ENGINE CONTROL & SAFETY UNIT (ECSU-AM1)
SAFETY SYSTEM IN/OUTPUT
CONNECTOR NO. & PIN NO.
WIRE NO.
SAFETY CPU FAULT
RY0027
SAFETY SHUTDOWN OF HARD WIRE SYSTEM
DIP SWITCH : SW3
SW3-1 OFF ~~ON~~
SW3-2 OFF ~~ON~~
SW3-1 (RESET)
OFF:FO HANDLE
ON :PUSH BUTTON
SW3-2:NOT USE
SHUTDOWN RY051
DIP SWITCH : SW2
SW2-1 OFF ~~ON~~
SW2-2 OFF ~~ON~~
SW2-3 ~~OFF~~ ON
SW2-4 ~~OFF~~ ON
SW2-5 OFF ~~ON~~
SW2-6 OFF ~~ON~~
SW2-7 OFF ~~ON~~
SW2-8 ~~OFF~~ ON
PC7 PC7 R-TB1
EC28 EC28 C7 B7 CN-EP
FO HANDLE (RUN POSITION : ON)
PC20 PC20 SPR-13
LOW SPEED (200min-1ABOVE : ON)
PC8 PC8 SPR-12
OVER SPEED S/DOWN (112~115% : ON)
EC10 EC10 R R:3.9 KΩ 2 1 DIN-12
LO LOW PRESSURE S/DOWN (LOW : ON)
EC29 EC29 R R:3.9 KΩ 2 1 DIN-11
H/T SIDE FW HIGH TEMPERATURE S/DOWN (HIGH : ON)
AC1 AC1 C9 B9 CN-EC1
MANUAL EMERGENCY STOP (STOP : ON)
PC21 PC21 B3 A3 CN-EC2
NOT USE
AC18 AC18 A10 D9 CN-EC1
NOT USE
P3 N3 FROM SAFETY POWER CIRCUIT DC24V
RTB-1 RTB-1
SD
R-TB2 R-TB2
N3 18-1 EC11 EC11 20ST 2 1 DIN-09
ENGINE STOP MAGNETIC VALVE FOR SAFETY DC24V 0.38A
P3 18-17 PC13
INDICATOR LAMP
WL CONTROL/SAFETY POWER
GL ENGINE RUN
GL SAFETY CPU RUN
START FAIL / SHUTDOWN
RL START FAILURE
RL MANUAL EMERGENCY STOP
RL OVER SPEED
RL LO LOW PRESSURE
RL H/T FW HIGH TEMPERATURE
RL
RL
SHUTDOWN SYSTEM FAILURE
RL ENG STOP MAG VALVE
RL SPEED DETECTOR
RL LO PRESSURE SENSOR
RL H/T FW TEMP SENSOR
RL
RL
RL
MAGNETIC PICK-UP
MP 1 2 3 DIN-02
041 042 043
P N T2 T0
14 13 12 SC
IP IN SPR-1
SPEED RELAY
IP IN 1 2 1/1 7 BASE ONLY
10 11 3 6 8
IP1 IN1 IS1 CN-EC2 C4 D4 A5
IP2 IN2 IS2 DIN-61 1 2 3
TM ENG SIDE
ENG REVOLUTION 4~20mA/0~1200min-1
CN
DWG. NO. 1309-052-23
SHEET NO. (23)
TITLE GENERATOR ENGINE CONTROL PANEL
株式会社 阪神電機製作所 HANSHIN ELECTRIC MFG.CO.,LTD.
FILE NO. 023-ESC
6EY22
ST D

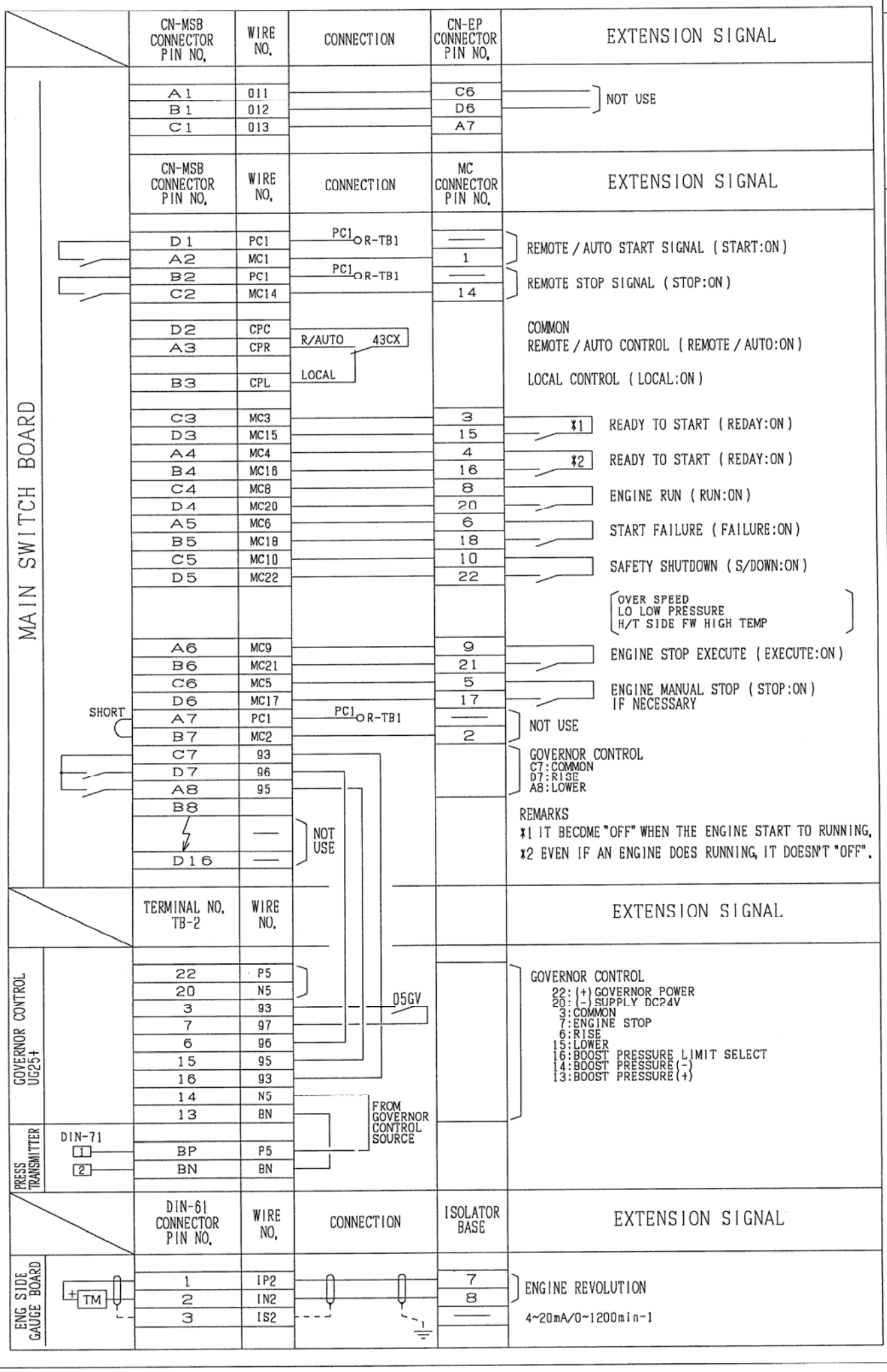
CN-MSB CONNECTOR PIN NO.
WIRE NO.
CONNECTION
CN-EP CONNECTOR PIN NO.
EXTENSION SIGNAL
A1 011 C6
B1 012 D6
C1 013 A7
NOT USE
CN-MSB CONNECTOR PIN NO.
WIRE NO.
CONNECTION
MC CONNECTOR PIN NO.
EXTENSION SIGNAL
MAIN SWITCH BOARD
D1 PC1 PC1 R-TB1
A2 MC1 1
REMOTE / AUTO START SIGNAL (START:ON)
B2 PC1 PC1 R-TB1
C2 MC14 14
REMOTE STOP SIGNAL (STOP:ON)
D2 CPC
A3 CPR R/AUTO 43CX
COMMON
REMOTE / AUTO CONTROL (REMOTE / AUTO:ON)
B3 CPL LOCAL
LOCAL CONTROL (LOCAL:ON)
C3 MC3 3
D3 MC15 15
*1
READY TO START (REDAY:ON)
A4 MC4 4
B4 MC16 16
*2
READY TO START (REDAY:ON)
C4 MC8 8
D4 MC20 20
ENGINE RUN (RUN:ON)
A5 MC6 6
B5 MC18 18
START FAILURE (FAILURE:ON)
C5 MC10 10
D5 MC22 22
SAFETY SHUTDOWN (S/DOWN:ON)
OVER SPEED
LO LOW PRESSURE
H/T SIDE FW HIGH TEMP
A6 MC9 9
B6 MC21 21
ENGINE STOP EXECUTE (EXECUTE:ON)
C6 MC5 5
D6 MC17 17
ENGINE MANUAL STOP (STOP:ON)
IF NECESSARY
SHORT
A7 PC1 PC1 R-TB1
B7 MC2 2
NOT USE
C7 93
D7 96
A8 95
GOVERNOR CONTROL
C7:COMMON
D7:RISE
A8:LOWER
B8
NOT USE
D16
REMARKS
*1 IT BECOME "OFF" WHEN THE ENGINE START TO RUNNING.
*2 EVEN IF AN ENGINE DOES RUNNING, IT DOESN'T "OFF".
TERMINAL NO. TB-2
WIRE NO.
EXTENSION SIGNAL
GOVERNOR CONTROL UG25+
22 P5
20 N5
3 93
7 97
6 96
15 95
16 93
14 N5
13 BN
05GV
FROM GOVERNOR CONTROL SOURCE
GOVERNOR CONTROL
22:(+)GOVERNOR POWER
20:(-)SUPPLY DC24V
3:COMMON
7:ENGINE STOP
6:RISE
15:LOWER
16:BOOST PRESSURE LIMIT SELECT
14:BOOST PRESSURE(-)
13:BOOST PRESSURE(+)
PRESS TRANSMITTER
DIN-71
1 BP P5
2 BN BN
DIN-61 CONNECTOR PIN NO.
WIRE NO.
CONNECTION
ISOLATOR BASE
EXTENSION SIGNAL
ENG SIDE GAUGE BOARD
TM
1 IP2 7
2 IN2 8
3 IS2
ENGINE REVOLUTION
4~20mA/0~1200min-1
CN
DWG. NO. 1309-052-24
SHEET NO. (24)
TITLE GENERATOR ENGINE CONTROL PANEL
株式会社 阪神電機製作所
HANSHIN ELECTRIC MFG. CO., LTD.
FILE NO. 024-EE1
6EY22
ST D

	AMS SIDE ALARM REPOSE	AMS SIDE DELAY TIMER	CN-EC1 CONNECTOR PIN NO.	WIRE NO.	CONNECTION	AC CONNECTOR PIN NO.	EXTENSION SIGNAL
ALARM MONITORING SYSTEM			A1	AC6		6	ENGINE RUN (RUN:ON)
			B1	AC38		38	
			C1	AC2		2	START FAILURE (FAIL:OFF)
			D1	AC34		34	
			A2	AC23		23	OVER SPEED — SAFETY SHUTDOWN (S/DOWN:OFF)
			B2	AC39		39	
			C2	AC7		7	LO LOW PRESS — SAFETY SHUTDOWN (S/DOWN:OFF)
			D2	AC24		24	
			A3	AC8		8	H/T FW HIGH TEMP — SAFETY SHUTDOWN (S/DOWN:OFF)
			B3	AC40		40	
	—	—	C3	AC9		9	NOT USE
			D3	AC26		26	
			A4	AC10		10	
			B4	AC42		42	
			C4	AC25		25	MANUAL EMERGENCY STOP (STOP:OFF)
			D4	AC41		41	
			A5	AC5		5	CONTROL POWER FAILURE — ELE POWER FAILURE (FAIL:OFF)
			B5	AC22		22	
			C5	AC27		27	SAFETY POWER FAILURE — ELE POWER FAILURE (FAIL:OFF)
			D5	AC43		43	
					PCC-4		
			A6	CA	CA — 27X		AC/DC MAIN POWER FAILURE — ELE POWER FAILURE (FAIL:OFF)
			B6	CC	CC		
			C6	CD	CD — 80X		
			B				
			D6	AC11		11	SAFETY SYSTEM — CPU FAULT CPU (FAULT:OFF)
	—	2SEC	A7	AC28		28	
			B7	AC4		4	CONTROL SYSTEM — CPU FAULT CPU (FAULT:OFF)
			C7	AC36		36	
			D7	AC44		44	G/E ALARM REPOSE FOR AMS (REPOSE:ON 28/30)
	—	—	A8	AC31		31	
			B8	AC12		12	
			C8	AC45		45	SPEED DETECTOR ABNOR — SHUTDOWN SYSTEM FAILURE (FAIL:OFF)
	—	2SEC	D8	AC29		29	STOP MV/SENSOR FAULT — SHUTDOWN SYSTEM FAILURE (FAIL:OFF)
			A9	AC13		13	
			B9	PC7	PC7 R-TB1	—	MANUAL EMERGENCY STOP (STOP:ON)
			C9	AC1		1	
			D9	PC7	PC7 R-TB1	—	NOT USE
			A10	AC18		18	
			B				
			B10		80GX		GOVERNOR CONTROL POWER FAILURE (FAIL:OFF)
			C10				
			D10		NOT USE		
			A16				
			B16				
			C16				
			D16				

	TERMINAL NO. TB-2	WIRE NO.	CONNECTION		EXTENSION SIGNAL
FW PRE-HEATER CONTROL PANEL	H1	H1		—	14ZX — ENGINE RUN (RUN:OFF)
	H3	H3		—	

CN

DWG. NO. 1309-052-25

SHEET NO. (25)

TITLE GENERATOR ENGINE CONTROL PANEL

株式会社 阪神電機製作所 HANSHIN ELECTRIC MFG.CO.,LTD.

FILE NO. 025-EE2

6EY22

ST D

ALARM MONITORING SYSTEM

AMS SIDE ALARM REPOSE	AMS SIDE DELAY TIMER	CN-EC2 CONNECTOR PIN NO.	WIRE NO.	CONNECTION	AC CONNECTOR PIN NO.	EXTENSION SIGNAL
		A1	AC19		19	NOT USE
		B1	AC35		35	
		C1	AC3		3	
		D1	AC20		20	
		A2	AC15		15	SAFETY SHUTDOWN OF HARD WIRE SYSTEM (IT IS OUTPUT ONLY WHEN HARD WIRE SYSTEM SHUTDOWN OCCUR IN CPU FAULT CONDITION OF ECSU SAFETY SYSTEM.)
		B2	AC32		32	
		C2	AC14		14	LO STRAINER DIFF PRESS ALARM REPOSE (REPOSE:ON)
		D2	AC46		46	

CN-EC2 CONNECTOR PIN NO.	WIRE NO.	CONNECTION	PC CONNECTOR PIN NO.	EXTENSION SIGNAL
A3	PC7	PC7 OR-TB1	—	NOT USE
B3	PC21		21	

CN-EC2 CONNECTOR PIN NO.	WIRE NO.	CONNECTION	SMART RELAY SR	EXTENSION SIGNAL
C3	L41		Q3-1	LO PRIMING FAILURE (FAIL:OFF) Q3
D3	L42		Q3-2	

CN-EC2 CONNECTOR PIN NO.	WIRE NO.	CONNECTION	CN-LP CONNECTOR PIN NO.	EXTENSION SIGNAL
A4	L43		C2	CN-LPS C2 ← G/E LO PRIM PUMP STARTER; D2 B8 LO PRIMING PUMP RUN (RUN:ON)
B4	L44		D2	

CN-EC2 CONNECTOR PIN NO.	WIRE NO.	CONNECTION	ISOLATOR & T/C REV.	EXTENSION SIGNAL
C4	IP1		3	NOT USE
D4	IN1		6	
A5	IS1		—	
B5	—	NOT USE		
C5	—			
D5	—			

AMS SIDE ALARM REPOSE	AMS SIDE DELAY TIMER	CN-EC2 CONNECTOR PIN NO.	WIRE NO.	CONNECTION	DIN CONNECTOR NO. / PIN	EXTENSION SIGNAL
—	5SEC	A6	151		DIN-55 1	CONTROL AIR LOW PRESSURE (LOW:OFF)
		B6	152		DIN-55 2	
○	—	C6	161		DIN-51 1	LO STRAINER DIFF PRESS HIGH (HIGH:OFF)
		D6	162		DIN-51 2	
—	—	A7	171		DIN-52 1	NOT USE
		B7	172		DIN-52 2	
—	—	C7	181		DIN-21 1	FO HIGH PRESS PIPE LEAK (LEAK:OFF)
		D7	182		DIN-21 2	
—	15SEC	A8	191		DIN-23 1	LO SUMP TANK LOW LEVEL (LOW:OFF)
		B8	192		DIN-23 2	
		C8	193		DIN-23 3	
		D8	201		DIN-SP1 1	SPARE
		A9	202		DIN-SP1 2	
		B9	203		DIN-SP1 3	
		C9	—	NOT USE		
		D16	—			

CN

DWG. NO. 1309-052-26

SHEET NO. (26)

TITLE GENERATOR ENGINE CONTROL PANEL

株式会社 阪神電機製作所 HANSHIN ELECTRIC MFG. CO., LTD.

FILE NO. 026-EE3

6EY22

ST D

ALARM MONITORING SYSTEM

AMS SIDE ALARM REPOSE	AMS SIDE DELAY TIMER	CN-EC3 CONNECTOR PIN NO.	WIRE NO.	CONNECTION	DIN CONNECTOR PIN / NO.	EXTENSION SIGNAL
		A1	211		1	PRESS TRANSMITTER FOR FO ENGINE INLET
		B1	212		2 DIN-53	
		C1	221		1	PRESS TRANSMITTER FOR STARTING AIR ENGINE INLET
		D1	222		2 DIN-54	
		A2	231		1	PRESS TRANSMITTER FOR H/T FW ENGINE INLET
		B2	232		2 DIN-56	
		C2	241		1	NOT USE
		D2	242		2 DIN-57	
		A3	251		1	PRESS TRANSMITTER FOR LO ENGINE INLET
		B3	252		2 DIN-58	
		C3	261		1	NOT USE
		D3	262		2 DIN-59	
		A4	271		1	NOT USE
		B4	272		2 DIN-31	
		C4	273		3	
		D4	281		1	RESISTANCE BULB FOR H/T FW ENGINE OUTLET
		A5	282		2 DIN-33	
		B5	283		3	
		C5	291		1	NOT USE
		D5	292		2 DIN-34	
		A6	293		3	
		B6	301		1	RESISTANCE BULB FOR LO ENGINE INLET
		C6	302		2 DIN-35	
		D6	303		3	
		A7	311		1	NOT USE
		B7	312		2 DIN-36	
		C7	313		3	

CN-EC4 CONNECTOR PIN NO.	WIRE NO.	CONNECTION	DIN CONNECTOR PIN / NO.	EXTENSION SIGNAL
A1	321		1	RESISTANCE BULB FOR EXH GAS T/C INLET (NO.1~NO.3 CYL)
B1	322		2 DIN-43	
C1	323		3	
D1	331		1	RESISTANCE BULB FOR EXH GAS T/C INLET (NO.4~NO.6 CYL)
A2	332		2 DIN-44	
B2	333		3	
C2	341		1	NOT USE
D2	342		2 DIN-45	
A3	343		3	
B3	351			
C3	352			
D3	353			
A4	361			
B4	362			
C4	363			
D4	371			
A5	372			
B5	373			
C5	381			
D5	382			
A6	383			
B6	391			
C6	392			
D6	393			
A7	401			
B7	402			
C7	403			

CN

DWG. NO. 1309-052-26A

SHEET NO. (26A)

TITLE GENERATOR ENGINE CONTROL PANEL

株式会社 阪神電機製作所
HANSHIN ELECTRIC MFG. CO., LTD.

FILE NO. 026-EE3

6EY22

ST D

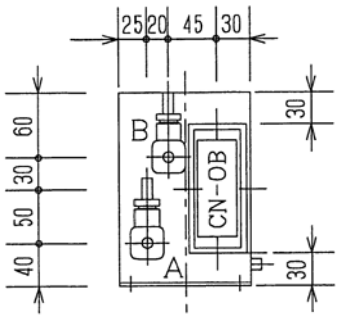

DIN CONNECTTOR

A : GOVERNOR MOTOR (DIN-01)

B : FO HANDLE SWITCH (DIN-04)

CN-OB : TO ENG CONTROL PANEL

NO	SYMBOL	NAME PLATE	SIZE
200	—	(SEE SHEET NO. 7)	—
201	—	LO PRIMING PUMP	60x12
202	—	AC440V POWER PUMP RUN PRIMING FAILURE	47x36
3	03CP	START	19.8x13.8
4	03TP	STOP	↓
5	PBRP	L/P RESET	↓
6	ES	EM' CY STOP	↓

ENG CONTROL PANEL

NO	SYMBOL	NAME PLATE	SIZE
101	—	ENGINE	60x12
102	—	REMOTE & AUTO LOCAL READY TO START	47x36
103	—	LOCAL REMOTE & AUTO	30x10
1	03C	ENGINE START	19.8x13.8
2	PBLT	LAMP TEST	↓

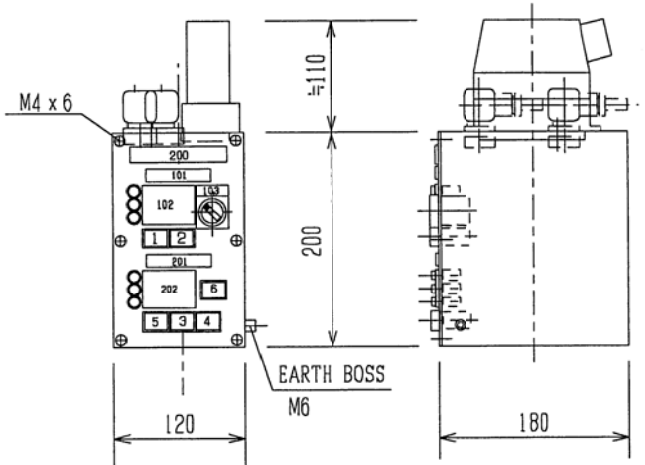

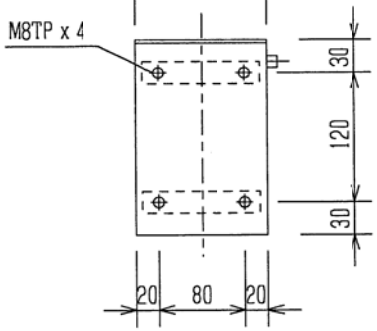

TYPE	6EY22-OPB
PAINT COLOR	7.5BG7/2
NO. OF SET	3SETs / VESSEL
TOTAL MASS	ABOUT 3 Kg
PROTECTION	IP44

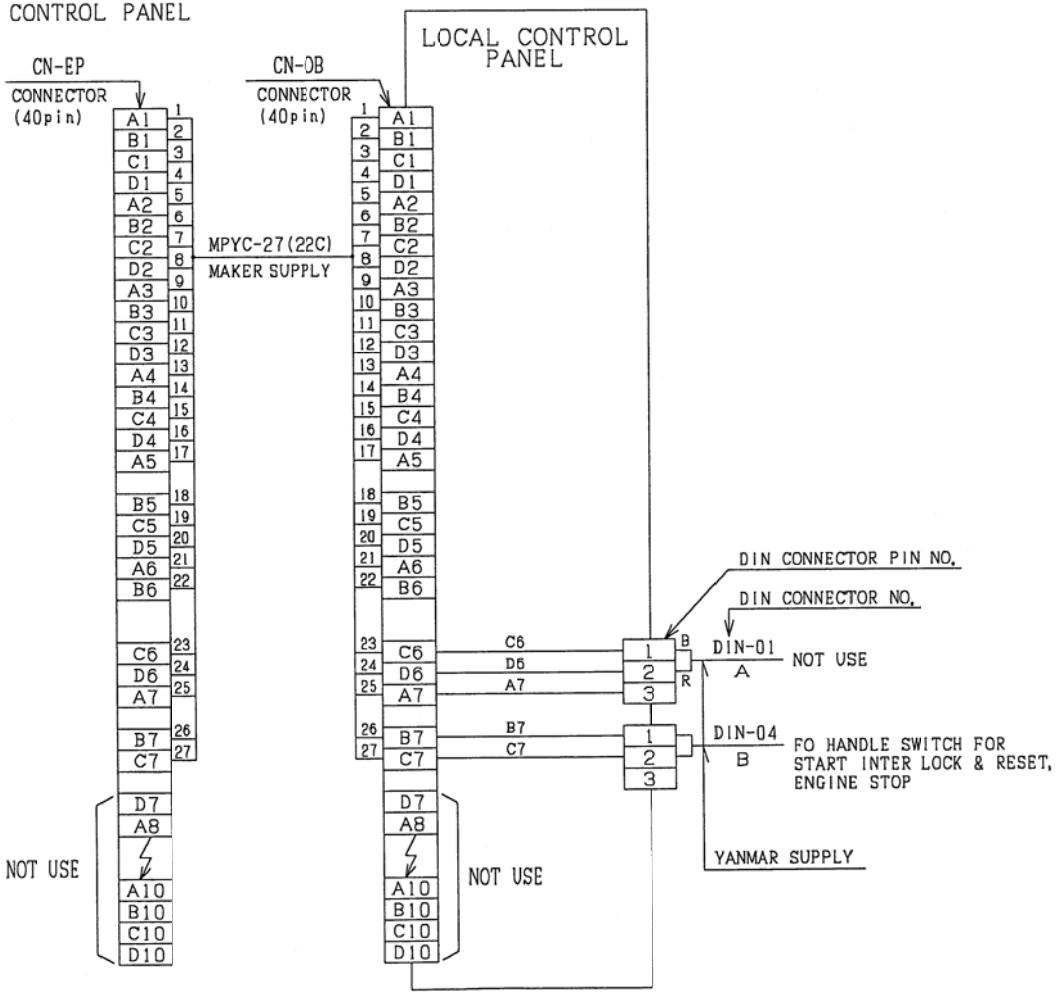

③	④			6EY22	FILE NO. 027-CPO	株式会社 阪神電機製作所 HANSHIN ELECTRIC MFG. CO., LTD.	TITLE LOCAL CONTROL PANEL	DWG. NO. 1309-052-27	0V
①	②								

FULL / ST' D

SHEET NO. (27)

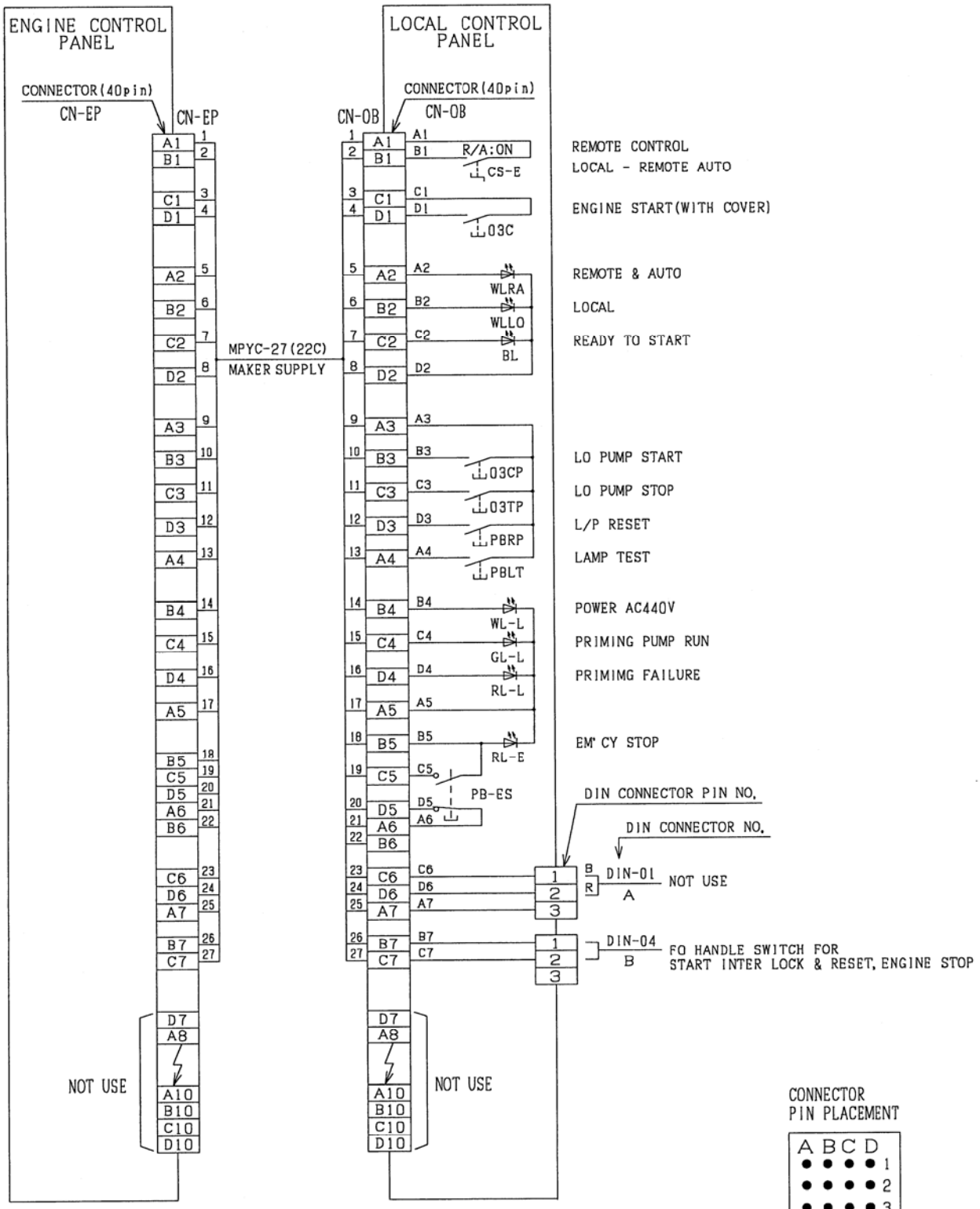

CN

DWG. NO. 1309-052-28

SHEET NO. (28)

TITLE ENG SIDE OPERATION BOARD

株式会社 阪神電機製作所
HANSHIN ELECTRIC MFG. CO., LTD.

FILE NO. 028-OCN

6EY22

FULL / ST' D

NO	NAME PLATE	SIZE
301	(SEE SHEET NO. 7)	—
WL	AC440V POWER	20.8X20.8
PSW	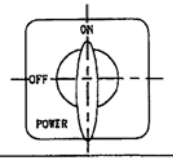	48x48

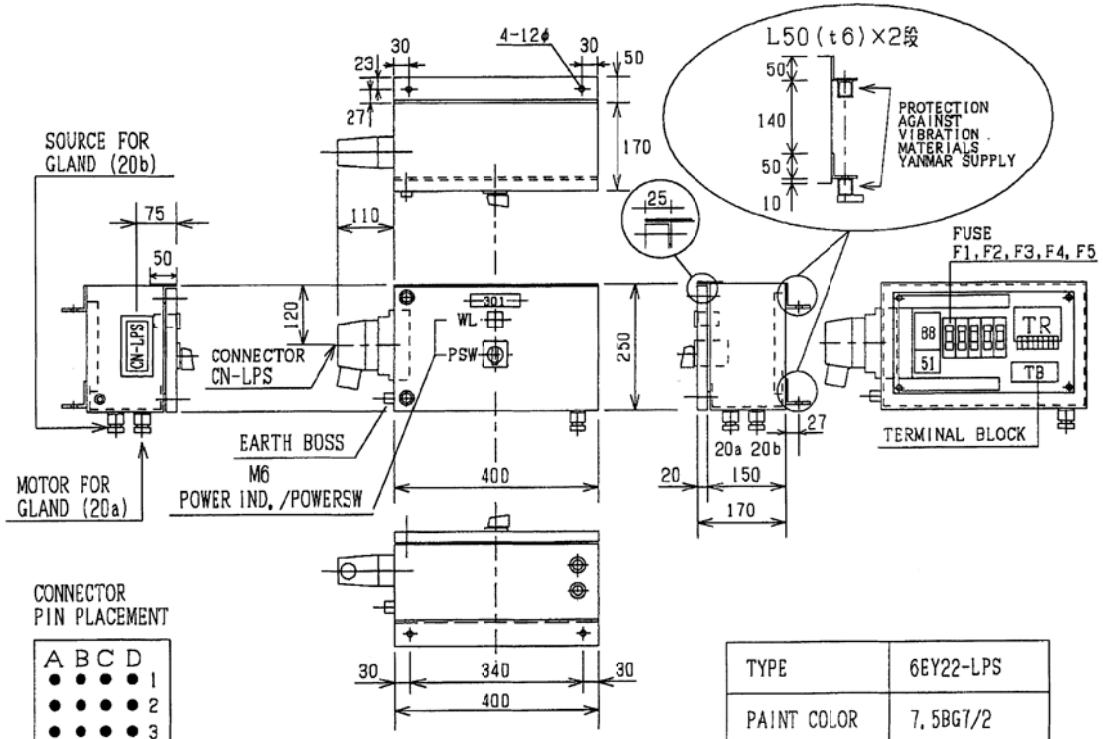

CONNECTOR PIN PLACEMENT

	A	B	C	D
1	●	●	●	●
2	●	●	●	●
3	●	●	●	●
4	○	○	○	○
5	○	○	○	○
6	○	○	○	○
7	○	○	○	○
8	○	○	○	○
9	○	○	○	○
10	○	○	○	○

TYPE	6EY22-LPS
PAINT COLOR	7.5BG7/2
NO. OF SET	3SET / VESSEL
TOTAL MASS	ABOUT 16 Kg
PROTECTION	IP44

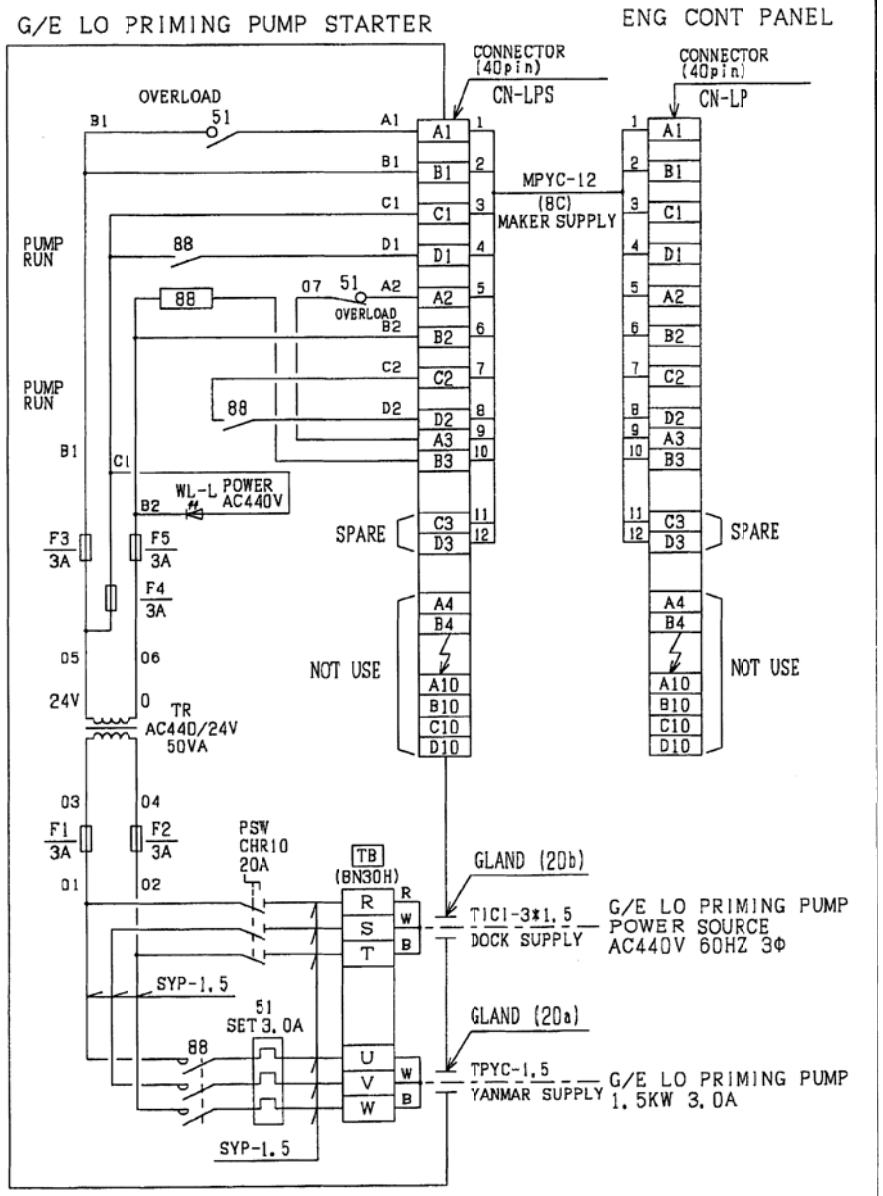

4	4			6EY22	FILE NO. 029-LPO	株式会社 阪神電機製作所 HANSHIN ELECTRIC MFG. CO., LTD.	TITLE G/E LO PRIMING PUMP STARTER	DWG. NO. 1309-052-29	0V
3 2013/11/20	2								

FULL&ST D

SHEET NO. (29)

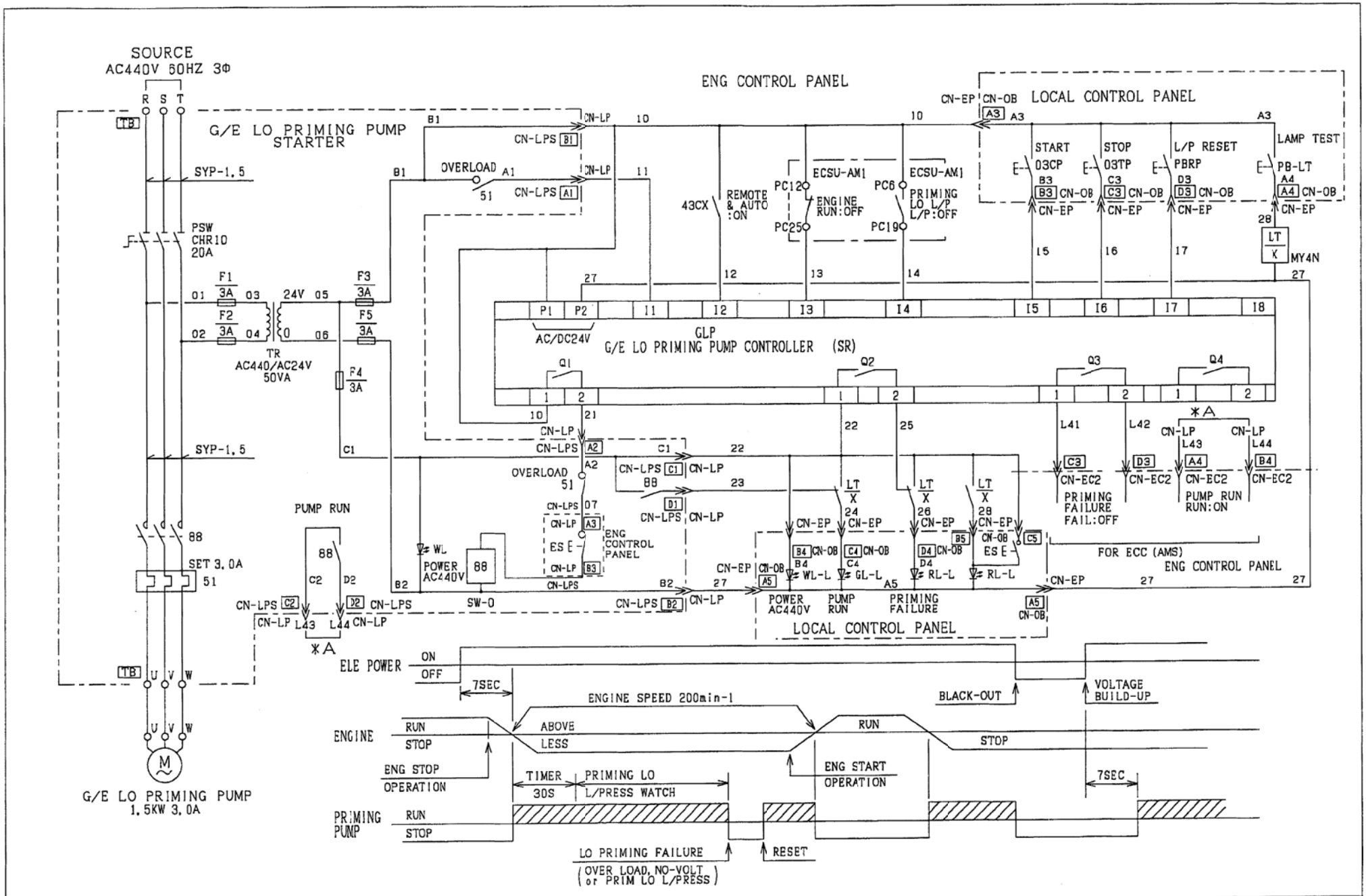

⚠	⚠			6EY22	FILE NO. 030-LCN	株式会社 阪神電機製作所 HANSHIN ELECTRIC MFG. CO., LTD.	TITLE G/E LO PRIMING PUMP STARTER	DWG. NO. 1309-052-30 CN
⚠ 2013/11/20	⚠							

FULL / ST' D

SHEET NO. (30)

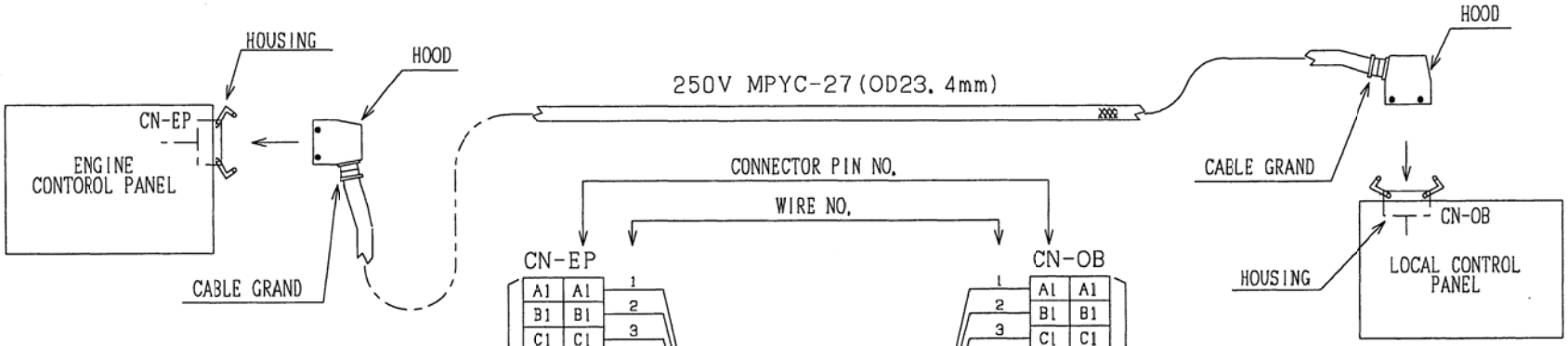

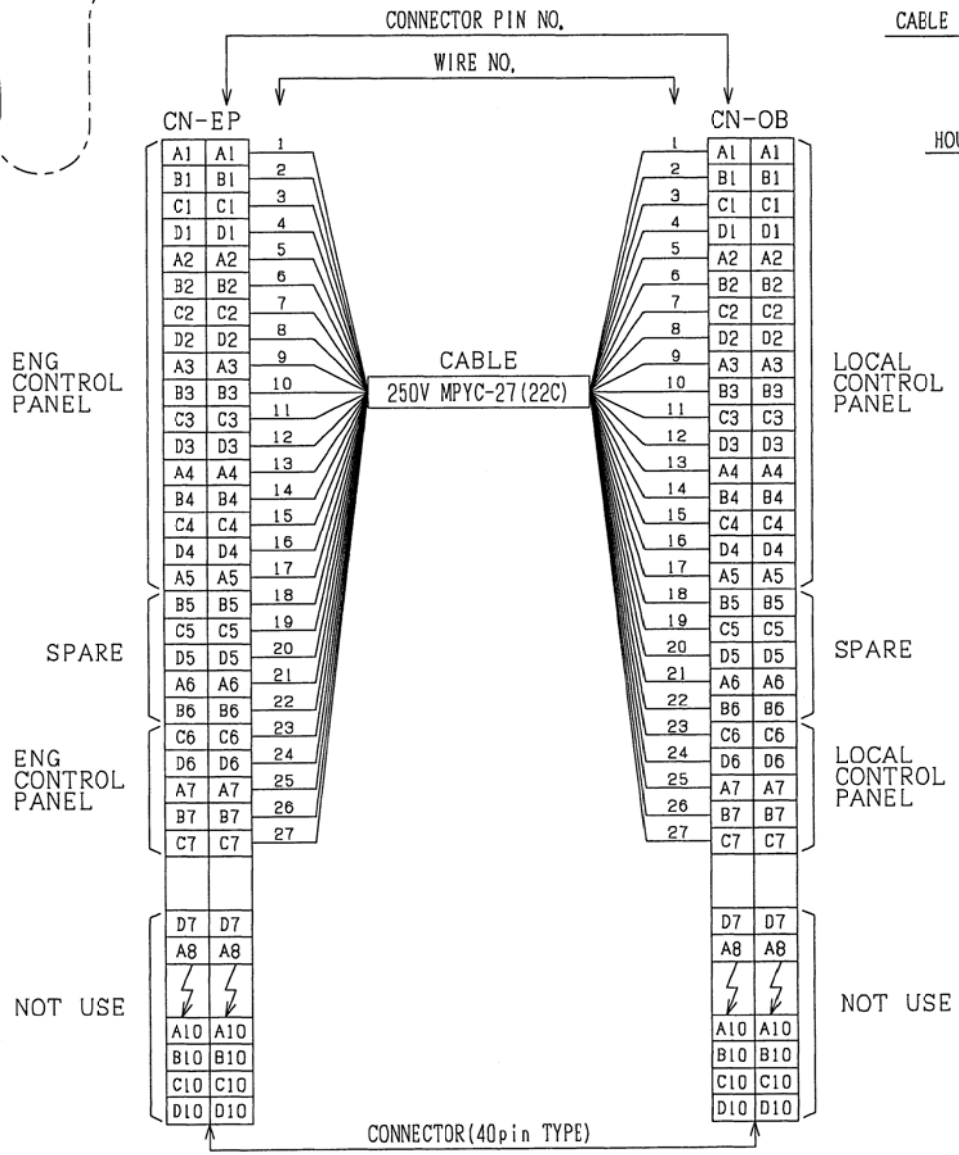

ENG CONTOROL PANEL
CABLE SIDE

CONNECTOR NO	CN-EP
HOUSING(MAIL)	1409354
CONNECTOR(MAIL)	1679485
PIN(MAIL)	1884089
CABLE GRAND	1646010

PANEL SIDE

CONNECTOR NO	CN-EP
HOOD(FEMAIL)	1771587
CONNECTOR(FEMAIL)	1679537
PIN(FEMAIL)	1884115

CONNECT CABLE WITH CONNECTOR	
TYPE	6EY22-CC1
SPECIFICATION	CABLE LENGTH:3450mm
NO.OF SET	1SET/ENG.
TOTAL MASS	ABOUT 4.2 kg
PROTECTION	IP 44

LOCAL CONTROL PANEL
CABLE SIDE

CONNECTOR NO	CN-OB
HOUSING(MAIL)	1409354
CONNECTOR(MAIL)	1679485
PIN(MAIL)	1884089
CABLE GRAND	1646010

PANEL SIDE

CONNECTOR NO	CN-OB
HOOD(FEMAIL)	1771587
CONNECTOR(FEMAIL)	1679537
PIN(FEMAIL)	1884115

△3	△4			6EY22	FILE NO. 031-CC1	株式会社 阪神電機製作所 HANSHIN ELECTRIC MFG.CO.,LTD.	TITLE CONNECT CABLE WITH CONNECTOR	DWG. NO. 1309-052-31	0V
△1	△2								

FULL / ST' D

SHEET NO. (31)

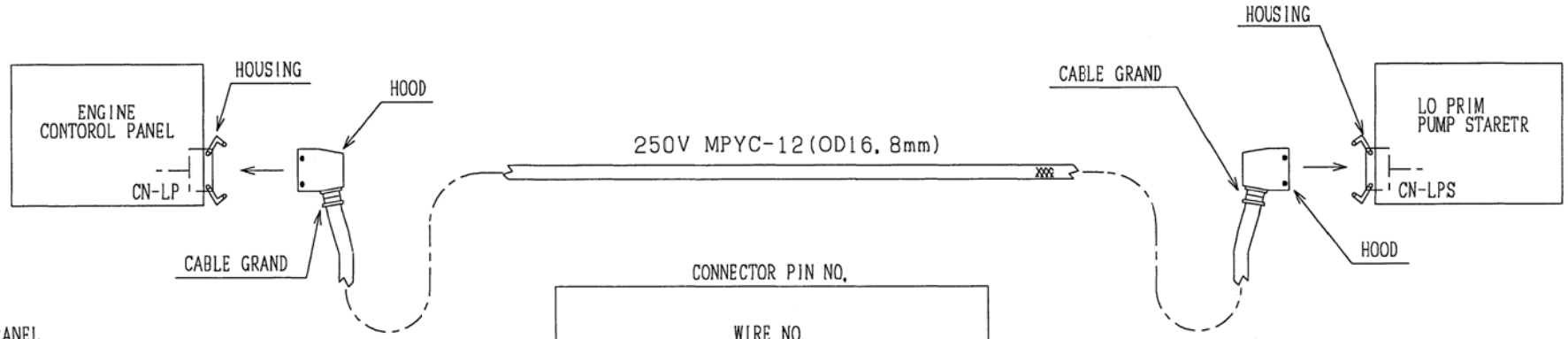

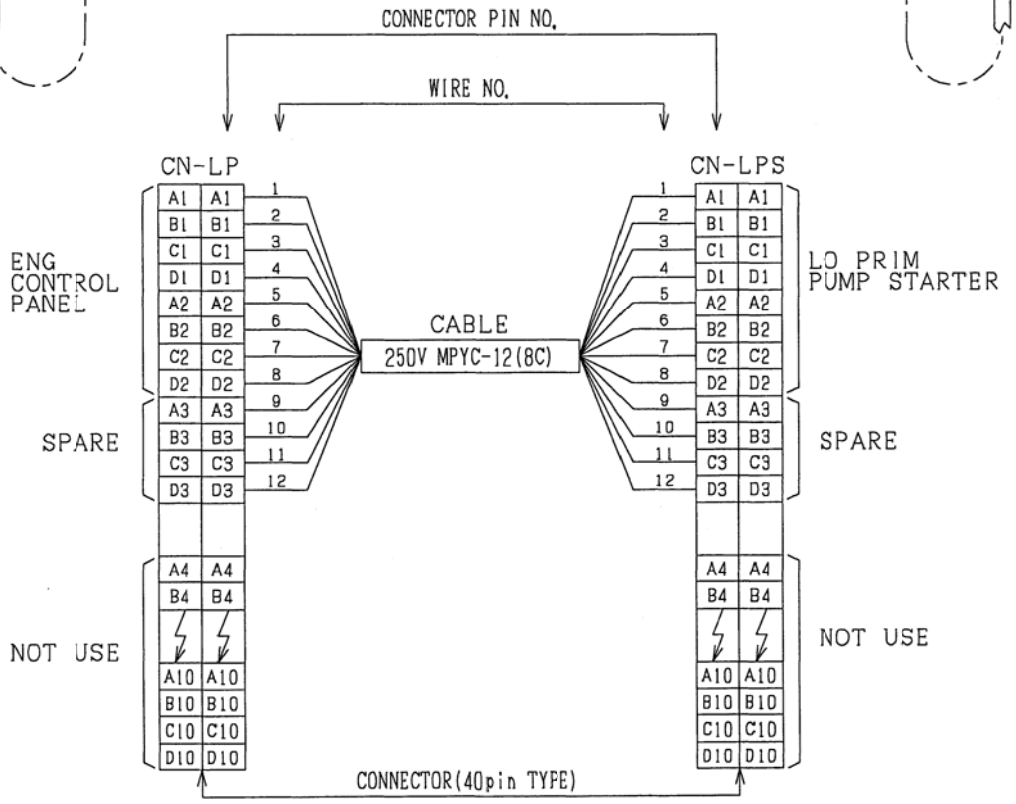

ENG CONTOROL PANEL
CABLE SIDE

CONNECTOR NO	CN-LP
HOUSING(MAIL)	1409354
CONNECTOR(MAIL)	1679485
PIN(MAIL)	1884089
CABLE GRAND	1690587

PANEL SIDE

CONNECTOR NO	CN-LP
HOOD(FEMAIL)	1771587
CONNECTOR(FEMAIL)	1679537
PIN(FEMAIL)	1884115

CONNECT CABLE WITH CONNECTOR	
TYPE	6EY22-CC2
SPECIFICATION	CABLE LENGTH:2900mm
NO. OF SET	1SET/ENG.
TOTAL MASS	ABOUT 4.0 kg
PROTECTION	IP 44

LO PRIM PUMP STARETR
CABLE SIDE

CONNECTOR NO	CN-LPS
HOUSING(MAIL)	1409354
CONNECTOR(MAIL)	1679485
PIN(MAIL)	1884089
CABLE GRAND	1690587

PANEL SIDE

CONNECTOR NO	CN-LPS
HOOD(FEMAIL)	1771587
CONNECTOR(FEMAIL)	1679537
PIN(FEMAIL)	1884115

△4	△4			6EY22	FILE NO. 032-CC2	株式会社 阪神電機製作所 HANSHIN ELECTRIC MFG. CO., LTD.	TITLE CONNECT CABLE WITH CONNECTOR	DWG. NO. 1309-052-32	DV
△1	△2								

FULL / ST' D

SHEET NO. (32)

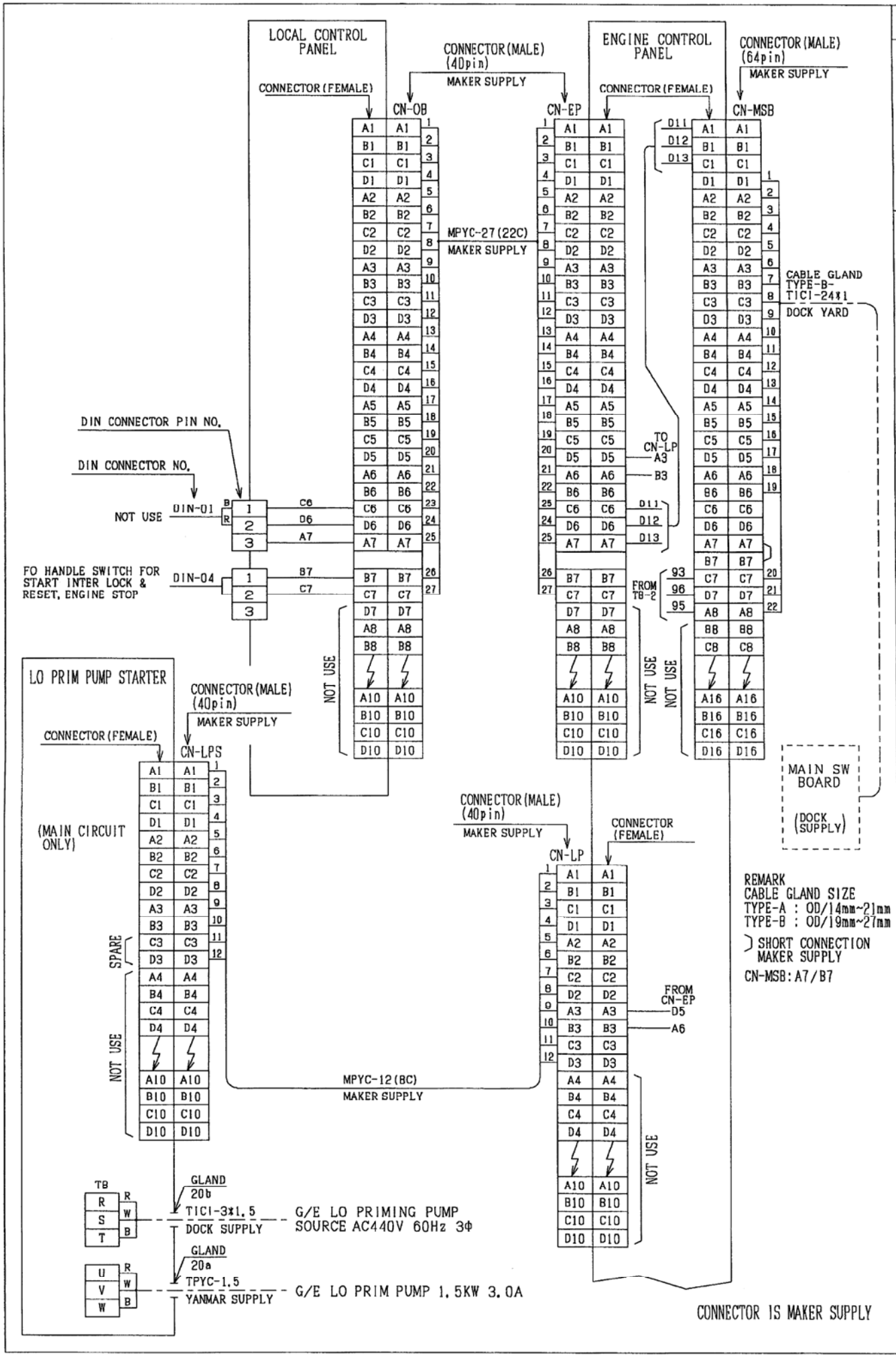
LOCAL CONTROL PANEL
CONNECTOR (FEMALE)
CN-OB
CONNECTOR (MALE) (40pin)
MAKER SUPPLY
MPYC-27 (22C)
MAKER SUPPLY
ENGINE CONTROL PANEL
CONNECTOR (FEMALE)
CN-EP
CONNECTOR (MALE) (64pin)
MAKER SUPPLY
CN-MSB
CABLE GLAND TYPE-B- TICI-24*1
DOCK YARD
DIN CONNECTOR PIN NO.
DIN CONNECTOR NO.
NOT USE
DIN-01
FO HANDLE SWITCH FOR START INTER LOCK & RESET, ENGINE STOP
DIN-04
TO CN-LP
FROM TB-2
NOT USE
LO PRIM PUMP STARTER
CONNECTOR (MALE) (40pin)
MAKER SUPPLY
CONNECTOR (FEMALE)
CN-LPS
(MAIN CIRCUIT ONLY)
SPARE
NOT USE
CONNECTOR (MALE) (40pin)
MAKER SUPPLY
CN-LP
CONNECTOR (FEMALE)
FROM CN-EP
MAIN SW BOARD
(DOCK SUPPLY)
REMARK
CABLE GLAND SIZE
TYPE-A : OD/14mm~21mm
TYPE-B : OD/19mm~27mm
SHORT CONNECTION MAKER SUPPLY
CN-MSB: A7/B7
MPYC-12 (8C)
MAKER SUPPLY
TB
GLAND 20b
TICI-3*1.5
DOCK SUPPLY
G/E LO PRIMING PUMP SOURCE AC440V 60Hz 3Φ
GLAND 20a
TPYC-1.5
YANMAR SUPPLY
G/E LO PRIM PUMP 1.5KW 3.0A
CONNECTOR IS MAKER SUPPLY
CN
DWG. NO. 1309-052-33
SHEET NO. (33)
TITLE GEN. DIESEL ENG. CONT. PANEL
株式会社 阪神電機製作所
HANSHIN ELECTRIC MFG. CO., LTD.
FILE NO. 033-TB1
6EY22
2013/11/20
FULL / ST D

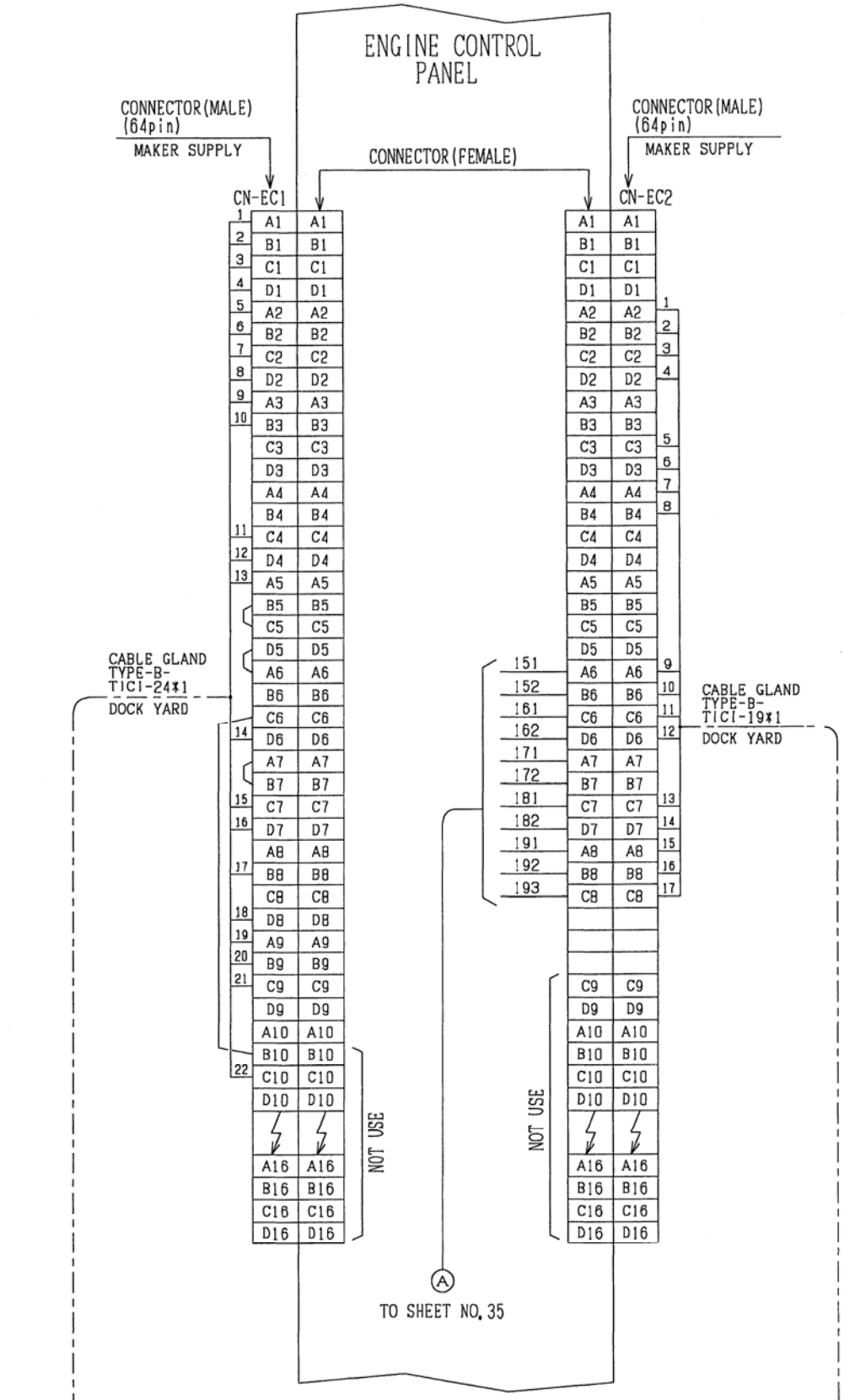

ELE POWER FAILURE
OUTPUT TERMINAL
CN-EC1:A5/CN-EC1:C6
(CN-EC1:B5/C5 SHORT
CN-EC1:D5/A6 SHORT)

CPU FAULT
OUTPUT TERMINAL
CN-EC1: D6/CN-EC1:C7
(CN-EC1:A7/B7 SHORT)

SHUTDOWN SYSTEM FAIL
OUTPUT TERMINAL
CN-EC1:D8/CN-EC1:A9

REMARK
CABLE GLAND SIZE
TYPE-A : OD/14mm~21mm
TYPE-B : OD/19mm~27mm

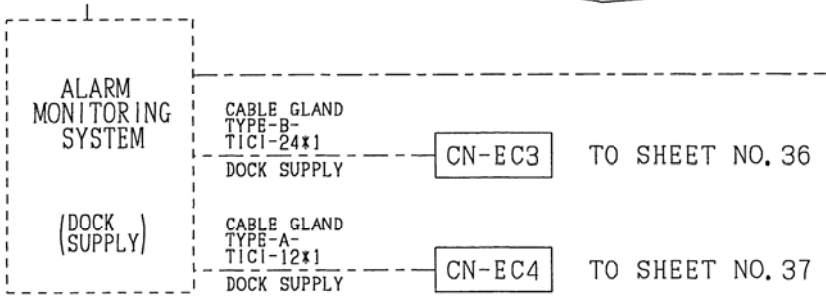

SHORT CONNECTION
MAKER SUPPLY
CN-EC1:B5/C5
:D5/A6
:A7/B7

CONNECTOR IS MAKER SUPPLY

CN	SHEET NO. (34)
DWG. NO.	1309-052-34
TITLE	GEN. DIESEL ENG. CONT. PANEL
株式会社 阪神電機製作所 HANSHIN ELECTRIC MFG. CO., LTD.	
FILE NO. 034-TB2	
6EY22	

ST D

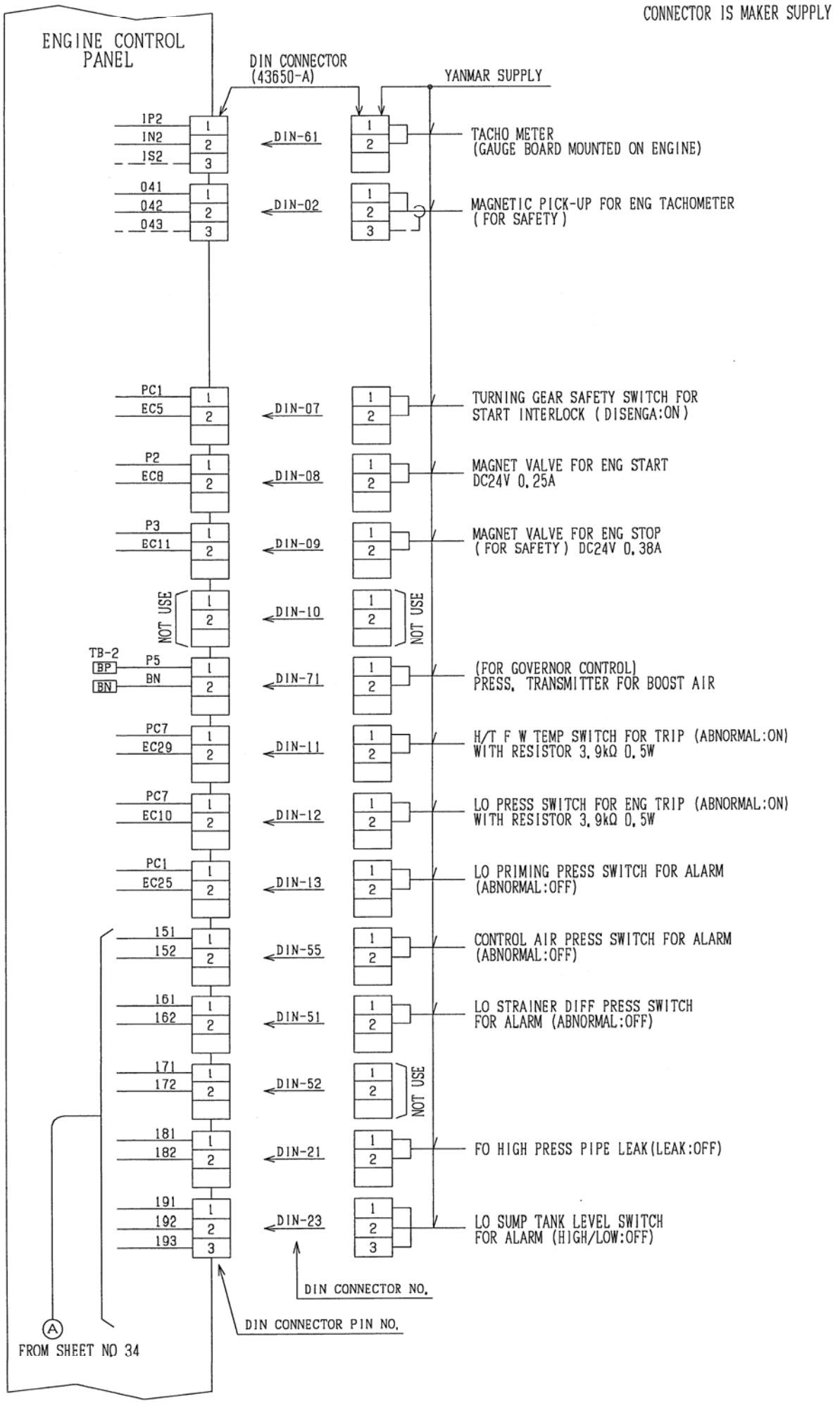

CN

DWG. NO. 1309-052-35

SHEET NO. (35)

TITLE GEN. DIESEL ENG. CONT. PANEL

株式会社 阪神電機製作所
HANSHIN ELECTRIC MFG. CO., LTD.

FILE NO. 035-TB3

6EY22

ST D

CONNECTOR IS MAKER SUPPLY

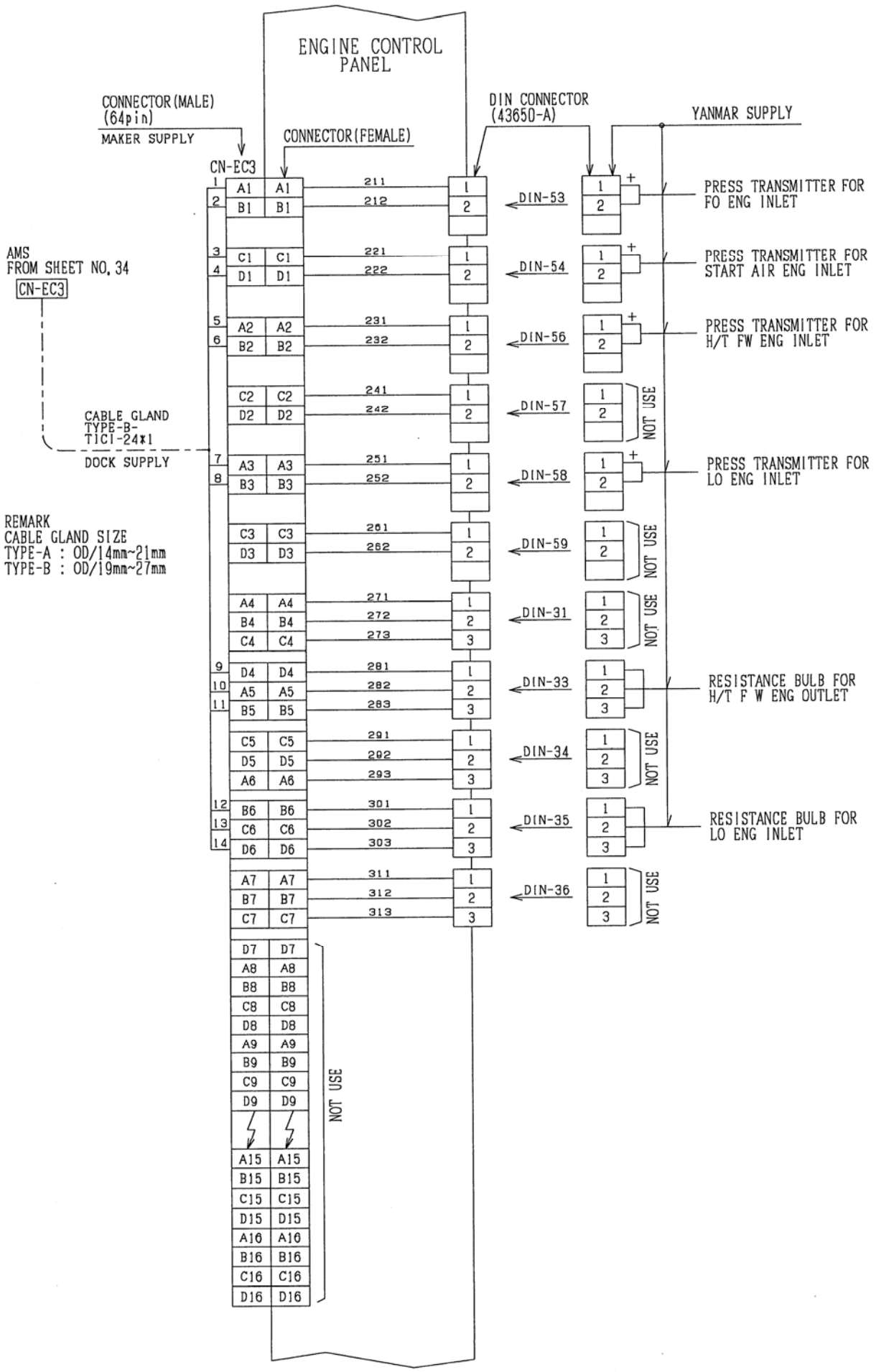

CN

SHEET NO. (36)

DWG. NO. 1309-C52-36

TITLE GEN. DIESEL ENG. CONT. PANEL

株式会社 阪神電機製作所
HANSHIN ELECTRIC MFG. CO., LTD.

FILE NO. 036-TB4

6EY22

FULL&ST D

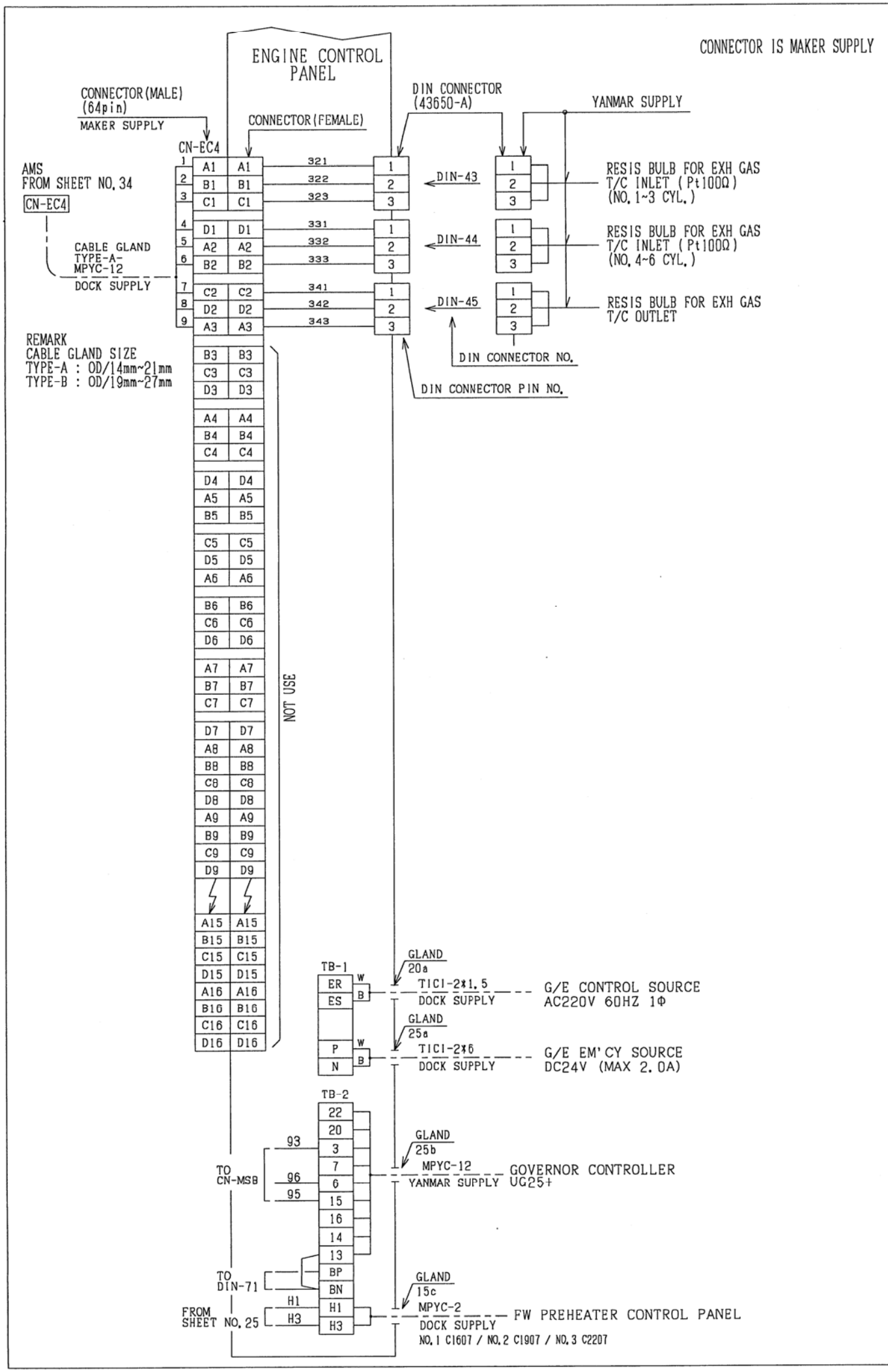

CN

SHEET NO. (37)

DWG. NO. 1309-052-37

TITLE GEN. DIESEL ENG. CONT. PANEL

株式会社 阪神電機製作所
HANSHIN ELECTRIC MFG. CO., LTD.

FILE NO. 037-TB5

6EY22

FULL SPEC

SHIP NO.	SPARE PARTS LIST FOR	U S E	SETS PER VESSEL
		G/E CONT PANEL, LO PRIM PUMP STARTER LOCAL CONTROL PANEL (MOUNTED ON ENGINE TYPE)	1

ITEM NO.	NAME OF PART	OUTLINE	QUANTITY WORKING PER SET	QUANTITY WORKING PER VESS	QUANTITY SPARE	REMARKS
1	AUX RELAY	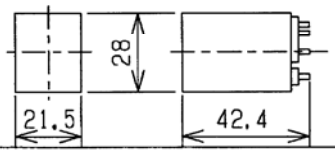	1	3	1	OMRON MY4N AC24V 60HZ
2			4	12	2	OMRON MY4-D DC24V
3a	LED	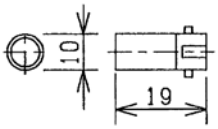	3	9	1	FUJI ELE. APX510-24W AC/DC24V
3b			1	3	1	APX510-24R AC/DC24V
4	TOOL FOR LED EXCHANGE	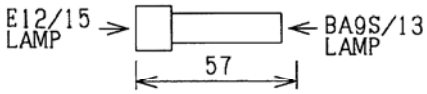	1	1	1	FUJI ELE. AHX790
5	LED LAMP	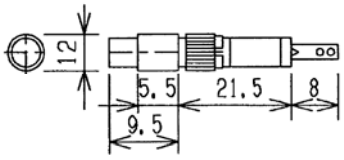	3	9	1	AP1M122W AC/DC24V IDEC
6			1	3	1	AP1M122S AC/DC24V IDEC
7			1	3	1	AP1M122R AC/DC24V IDEC
8			1	3	1	AP1M122G AC/DC24V IDEC
9	TOOL FOR LEDLAMP EXCHANGE	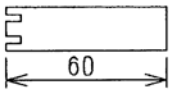	1	1	1	MT-003 IDEC
10	SURGE ABSORBING DIODE	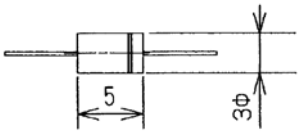	7	21	3	SANKEN ELE. EM1C
11	FUSE	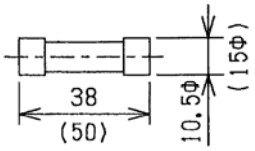 ( )UC1 TYPE	10	30	20	ENGINE PANEL UTSUNOMIYA NC0 3A
			5	15	15	LO P/P PANEL UTSUNOMIYA UC1 3A
12	MAGNET RELAY WITH OCR	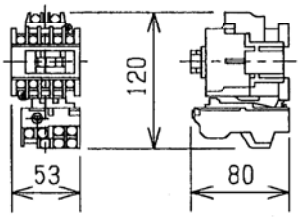	1	3	1	FUJI ELE. SW-05/3 (5a) AC24V 60HZ OCR 2.2~3.4A SET 3.0A
13	SPARE BOX	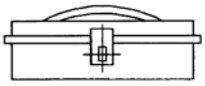 SIZE:360x150x90	—	1	—	STEEL TYPE PAINT COLOR SILVER

4	5	6	6EY22		FILE NO.
1 2013/11/20	2	3			038-ESA

株式会社 阪神電機製作所 HANSHIN ELECTRIC MFG. CO., LTD.	TITLE GEN ENGINE CONTROL & LO PRIMING PUMP PANEL	DWG. NO. 1309-052-38	SP

FULL / ST' D

SHEET NO. (38)

SHIP NO.	TOOLS LIST FOR	U S E	SETS PER VESSEL
		G/E CONT PANEL, LOCAL CONT PANEL LO PRIM PUMP STARTER (MOUNTED ON ENGINE TYPE)	1

ITEM NO.	NAME OF PART	OUTLINE	QUANTITY WORKING PER SET	QUANTITY WORKING PER VESS	QUANTITY SUPPLY	REMARKS
1	CRIMP TOOL	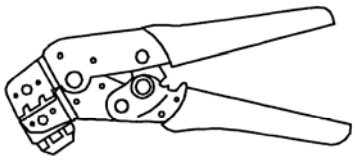	1	1	1	PHOENIX CONTACT CRIMPFOX-1 6-ER-1, 50-AT
2	EXTRACTING TOOL	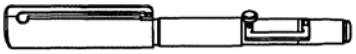	1	1	1	PHOENIX CONTACT VC-EW 1, 6
3	CONTACT PIN	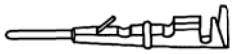	150	450	450	PHOENIX CONTACT CK1. 6-ER-1. 50 ST AG

5	6	7	8	FILE NO.
1	2	3	4	039-ETL

株式会社 阪神電機製作所 HANSHIN ELECTRIC MFG.CO.,LTD.	TITLE GEN ENGINE CONTROL & LO PRIMING PUMP PANEL	DWG.NO. 1309-052-39	SP

FULL SPEC

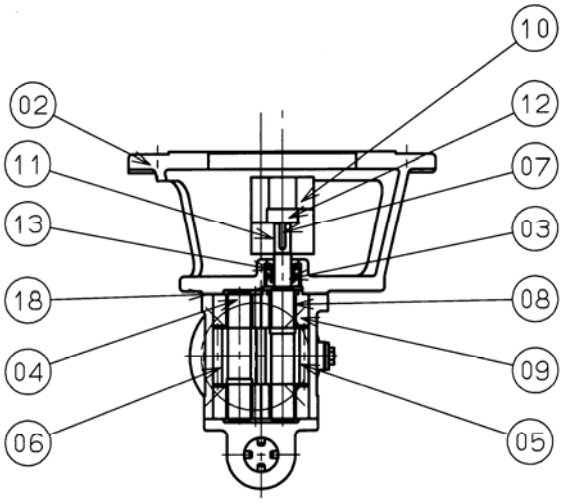

SECTION A-A

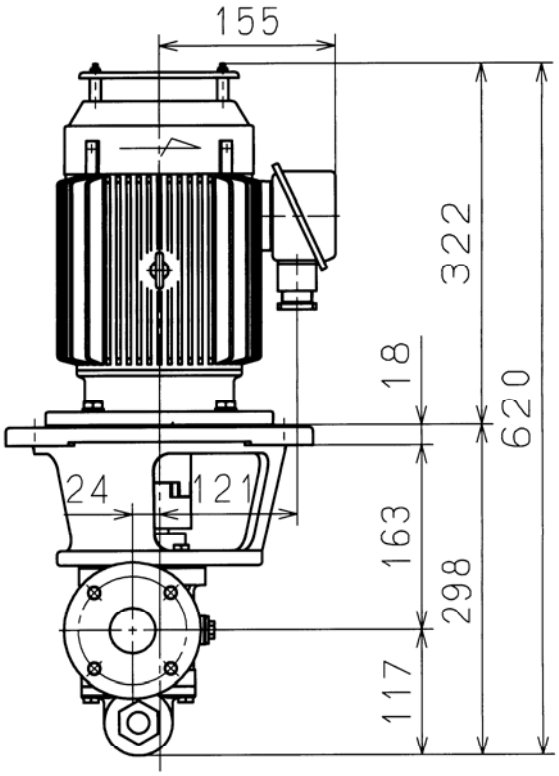

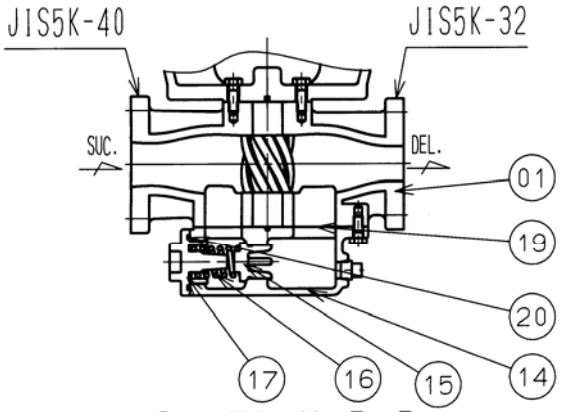

SECTION B-B

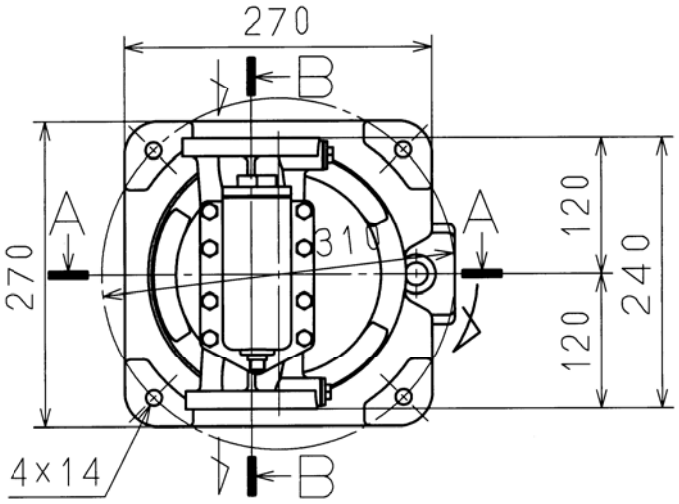

番号 NO.	品名 NAME OF PARTS	材質 MATERIAL	数量 QTY.
01	PUMP CASING	FC200	1
02	MOTOR FRAME	FC200	1
03	DRIVE SHAFT	S45C	1
04	DRIVEN SHAFT	S45C	1
05	DRIVE GEAR	S45C	1
06	DRIVEN GEAR	S45C	1
07	KEY	S45C	1
08	BEARING	SPCE+CAC603	4
09	BEARING HOUSING	FC200	4
10	COUPLING	ADC12	1
11	COUPLING	ADC12	1
12	COUPLING BUSH	NBR	1
13	OIL SEAL	NBR	2
14	SAF.VAL.BODY	FC200	1
15	SAFETY VALVE	CAC402	1
16	SAF.VAL.SPRING	SWPA	1
17	SPRING COVER	FC200	1
18	GASKET	PAPER	1
19	GASKET	PAPER	1
20	O-RING	RUBBER	1

仕様 SPECIFICATION			
吐出量	CAPACITY	m^3/h	5
吐出圧力	PRESSURE	MPa	0.15
吸込揚程	SUCTION HEAD	m	3
同期回転速度	SYNCHRONOUS SPEED	min^{-1}	1800
電動機	MOTOR	4P, 1.5kW, AC440V, 60HZ	
定格	RATING	連続 CONTINUOUS	
電流	AMPERE	3.0A	
絶縁	INSULATION CLASS	F	
保護	PROTECTION	IP44	
グランド	CABLE GLAND	20b	
ポンプメーカー	PUMP MAKER	TAIKO KIKAI INDUSTRIES CO.,LTD.	
ヤンマーコード	YANMAR CODE	46130-065590	

VLG-5C (3φ, AC440V, 60Hz)

潤滑油プライミングモーターポンプ

L.O.PRIMING MOTOR PUMP

ヤンマー株式会社

YANMAR CO., LTD.

DWG. No. B3-00003-440A

M463

SPECIFICATION 仕様	PISTON ピストン	VALVE 弁
USING FLUID 使用流体	LUB.OIL 潤滑油	COOLING WATER 冷却水
ENDURANCE PRESS. 耐圧	0.69MPa (7.0 kgf/cm²)	0.69MPa (7.0 kgf/cm²)
MAX.USING TEMP. 最高使用温度	80°C	70°C
USING PRESS. 使用圧力	0~0.44MPa (0~4.5kgf/cm²)	0~0.29MPa (0~3.0kgf/cm²)
VALVE OPEN MAX. DIFF. PRESS. FOR C.W. 最大開弁水圧	0.34MPa (AT L.O. PRESS. 0.39MPa) 3.5kgf/cm² (潤滑油圧力4kgf/cm²時)	
MASS 質量	22kg	

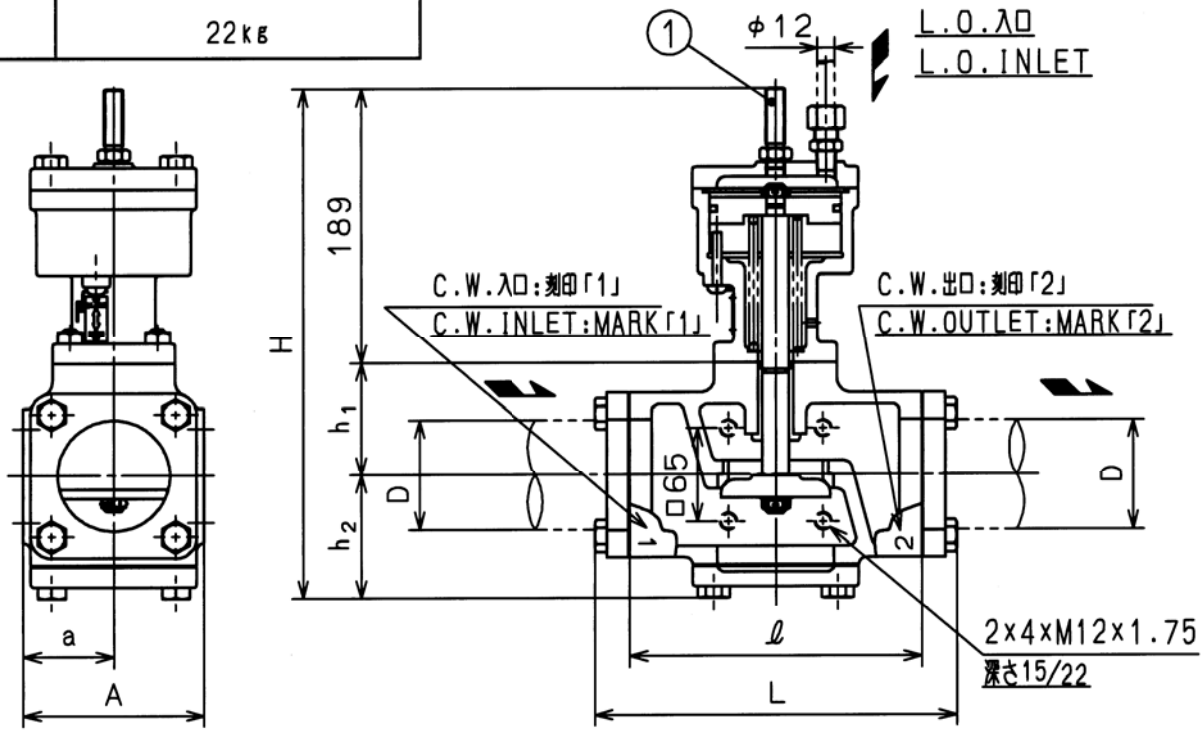

D	A	a	H	h_1	h_2	L	ℓ	仕組コード ASSY. NO.
80A	156	78	370	78	103	298	240	T000L0090C2

非常用ボルト ① 操作要領

作動不良時には、非常用ボルト ① を一旦取り外し反対側のねじ部をねじ込んで弁を全開にします。

EMERGENCY BOLT ① HANDLING

IN CASE OF OPERATING FAILURE, REMOVE THE EMERGENCY BOLT ①, SCREW THE OTHER SIDE OF THIS AND MAKE THE VALVE FULL OPEN POSITION.

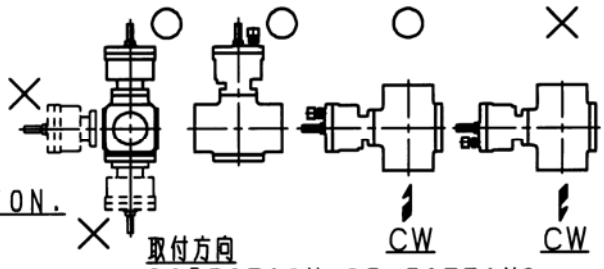

取付方向
DIRECTION OF FITTING

自動開閉弁は、デッキ配管上のサポート近くの振動の少い所に設置して下さい。

AUTOMATIC TWO-WAY VALVE IS TO BE SET ON A FEW VIBRATION POSITION ON DECK PIPING AND ON NEAR A SUPORT.

自動開閉2方弁（クーラ側冷却水入口用）

AUTOMATIC TWO-WAY VALVE (C.W. INLET OF COOLER)

ヤンマー株式会社
YANMAR CO., LTD.

DWG. No. B4-00004-4230

過給機出口排気管が縦に長い場合
SETTING T/C OUTLET LONG EXHAUST GAS PIPE VERTICALLY

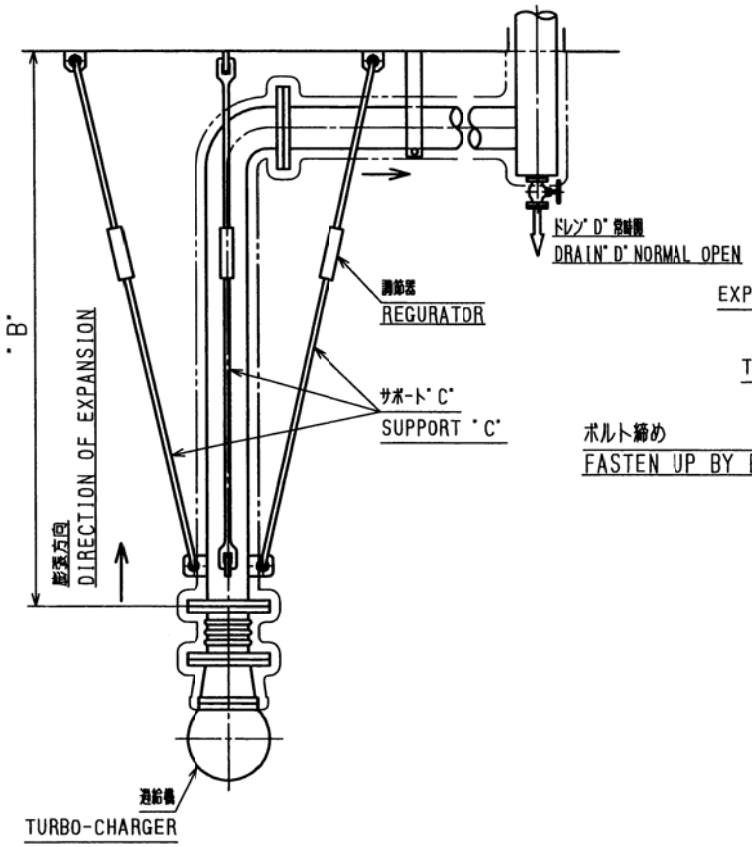

排気管が垂直の場合
SETTING EXHAUST GAS PIPE VERTICALLY

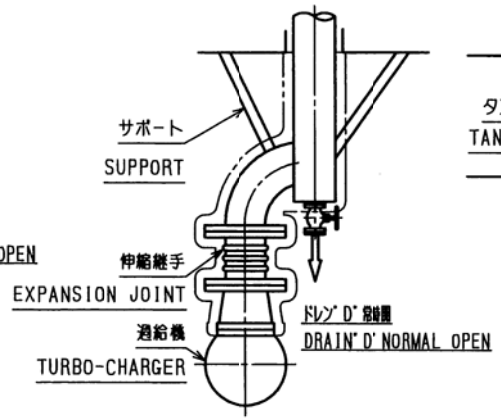

排気管が傾斜している場合
SETTING EXHAUST GAS PIPE OBRIQUELY

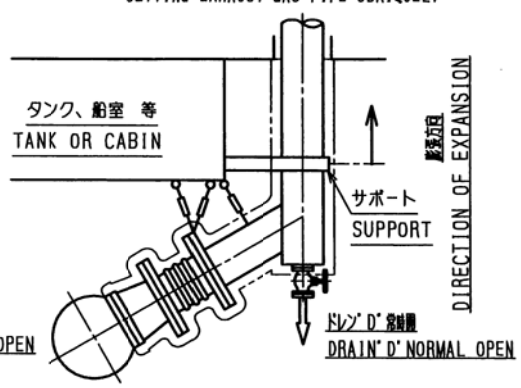

排気管が横に長い場合
SETTING EXHAUST GAS PIPE HORIZONTALLY

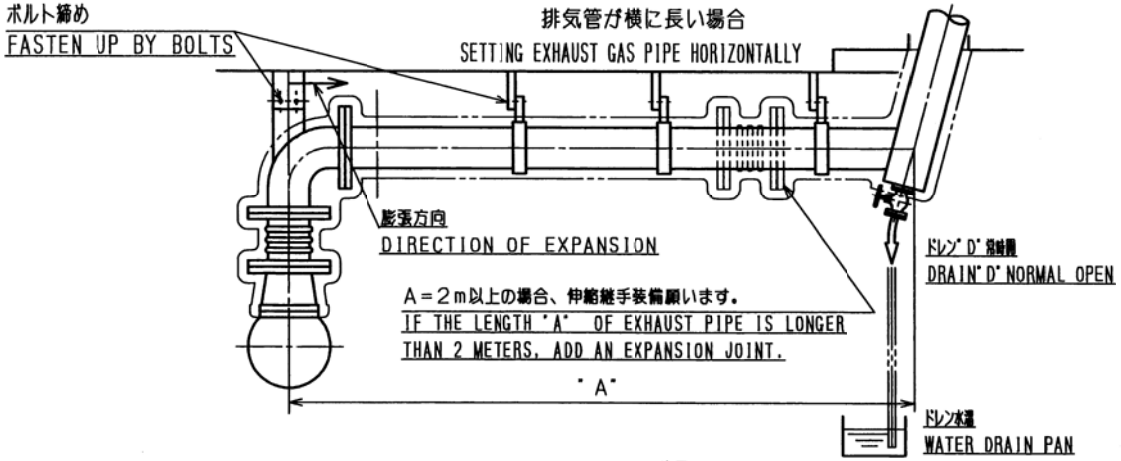

注記
雨水及び凝縮水が機関に逆流しない構造にしてください。
1) ドレン弁は常時開にしてください。
2) ドレン水はドレン水溜へ入れるか又はドレンアウトしてください。

CAUTION
MAKE IT THE STRUCTURE WHERE RAIN WATER AND CONDENSATION WATER DO NOT FLOW BACKWARDS TO ENGINE.
1) DRAIN VALVE IS TO BE NORMAL OPEN.
2) DRAIN WATER IS TO BE PUT TO WATER DRAIN PAN OR DRAIN OUT..

注 記
1. 排気管の熱膨張による荷重が過給機にかからないように配管願います。　寸法"B"が1.5m以上の場合はサポート"C"を天井より取り付けてください。
又は、過給機側へ4mm以上圧縮されない様な構造として下さい。
2. 伸縮継手の許容伸縮量は：伸び（引張方向）5mm，縮み（圧縮方向）40mmです。
3. 運転中、一度伸縮継手を緩めて締直し、排気管の膨張変形の歪を除去願います。

CAUTIONS
1. TURBO-CHARGER OUTLET PIPING IS TO BE SET SO AS NOT TO BE AFFECTED BY THE LOAD CAUSED HEAT ELONGATION.
SUPPORT "C" IS TO BE FIXED ON THE ROOF IF "B" IS OVER 1.5 m.
OR VERTICAL PIPING IS TO BE A STRUCTURE SO AS NOT TO BE COMPRESSED MORE THAN 4.0 mm TO TURBO-CHARGER SIDE.
2. EXPANSION JOINT PERMISSIBLE LENGTH : EXTENSION 5 mm, CONTRACTION 40 mm.
3. AT THE TRIAL OPERATION, PLEASE LOOSE THE BOLTS OF THE EXPANSION JOINT AND
FASTEN UP AGAIN BECAUSE OF THE ELIMINATION OF STRAIN FOR EXHAUST GAS PIPE.

排 気 伸 縮 継 手 取 付 要 領 図 SETTING OF THE EXPANSION JOINT		
ヤンマー株式会社 YANMAR CO., LTD.	DWG. No.	J4-00000-0054

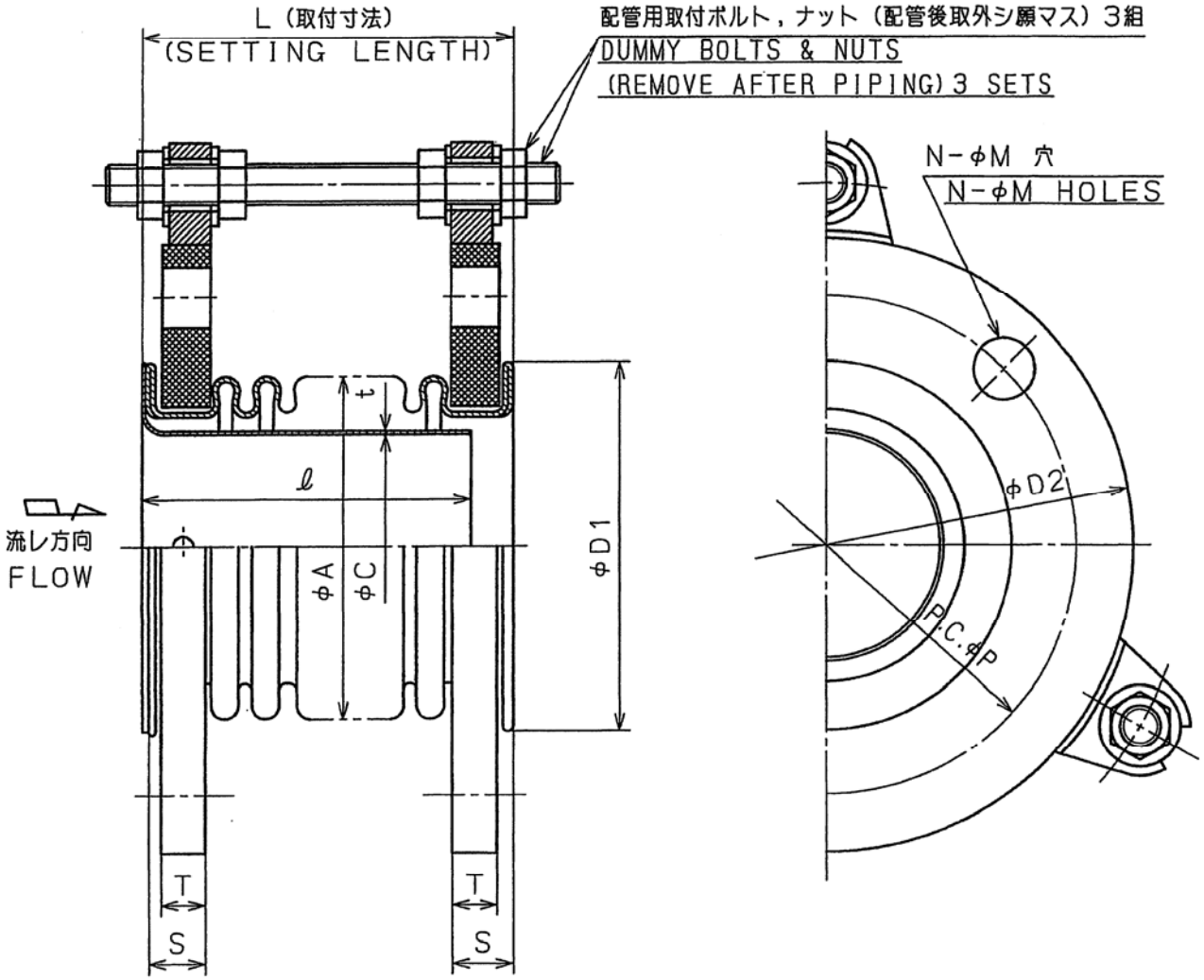

伸縮量：伸ビ（引張方向）5mm，縮ミ（圧縮方向）40mm----取付寸法基準
EXPANSION LENGTH:EXTENSION 5mm,CONTRACTION 40mm----SETTING LENGTH BASE

適用管径 PIPE SIZE	許容偏心 ALLOWABLE ECCENTRIC	主要寸法 DIMENSION (mm)										
		D1	D2	P	N	M	T	abt.S	A	C	t	ℓ
350A (14B)	5	394	480	435	12	25	24	26.6	418.2	331	1.5	155

L	質量 MASS (kg)	部品番号 PART NO.
201.5	35	23970-350001

備考：REMARKS
1．本品は、パッキンレス形の為、ガスケットパッキンは不要です。
GASKET PACKING IS NOT NEEDED FOR PACKINGLESS TYPE.

排 気 管 伸 縮 継 手
EXPANSION JOINT FOR EXH.GAS

ヤンマー株式会社
YANMAR CO., LTD.

DWG. No. B4-00001-0980

ターピン出口用
FOR TURBO CHARGER OUTLET

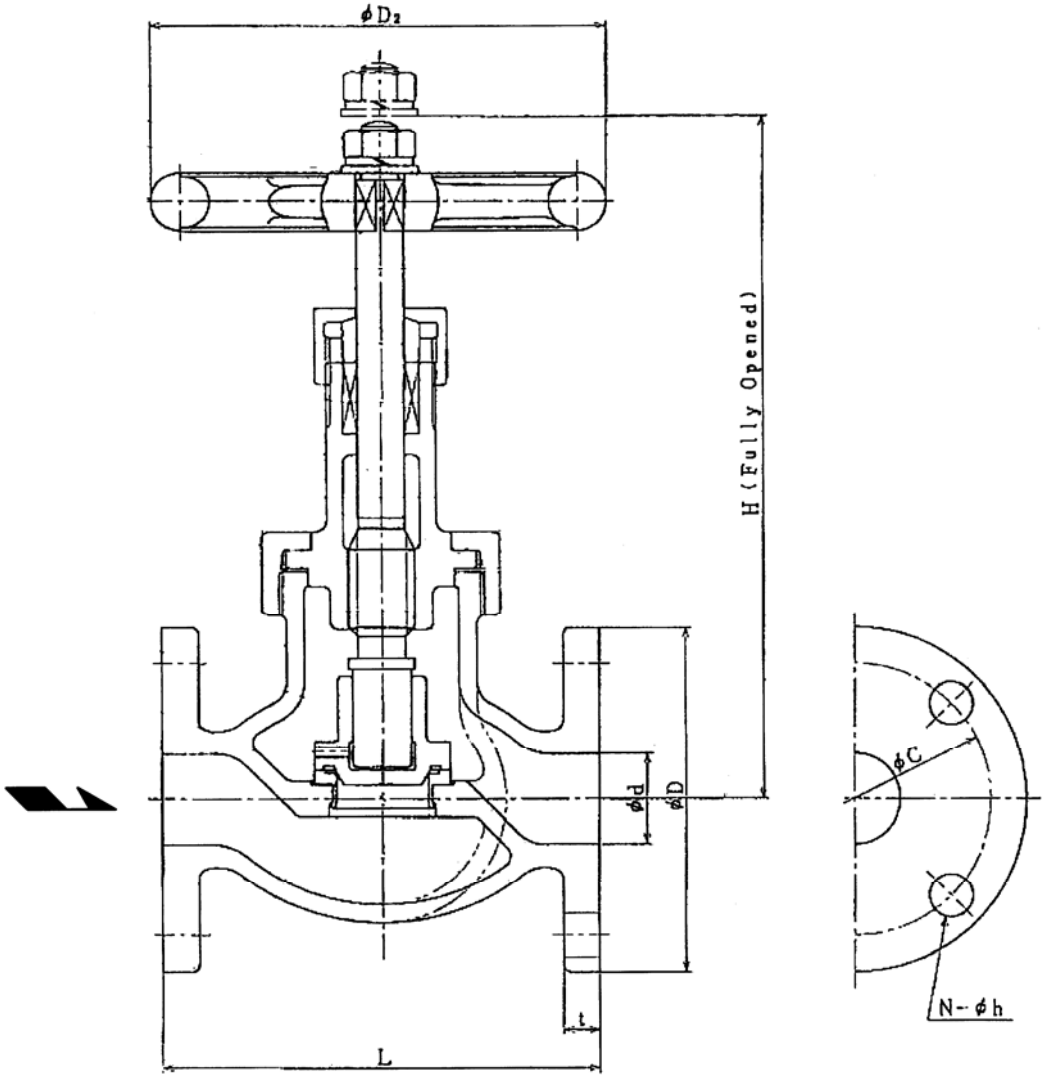

部品番号	呼び径 SIZE	主要寸法 DIMENSION (mm)									
		d	L	D_2	H	フランジ FLANGED					
						D	C	N	h	t	ボルト BOLT
43600-033200	15	15	100	80	143	80	60	4	12	9	M10

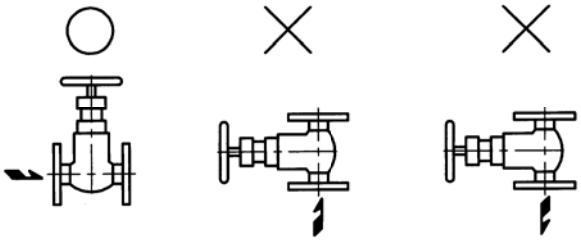

取付方向
DIRECTION OF FITTING

備考
最高使用圧力 0.49MPa (5kgf/cm²)

REMARKS
MAX. USING PRESSURE 0.49MPa (5kgf/cm²)

5K-15A 逆止玉形弁（暖機水入口用）

5K-15A SCREW-DOWN CHECK GLOBE VALVE FOR HOT WATER INLET

ヤンマー株式会社
YANMAR CO., LTD.

DWG. No. B4-00004-5820

HICAD

1B3C697

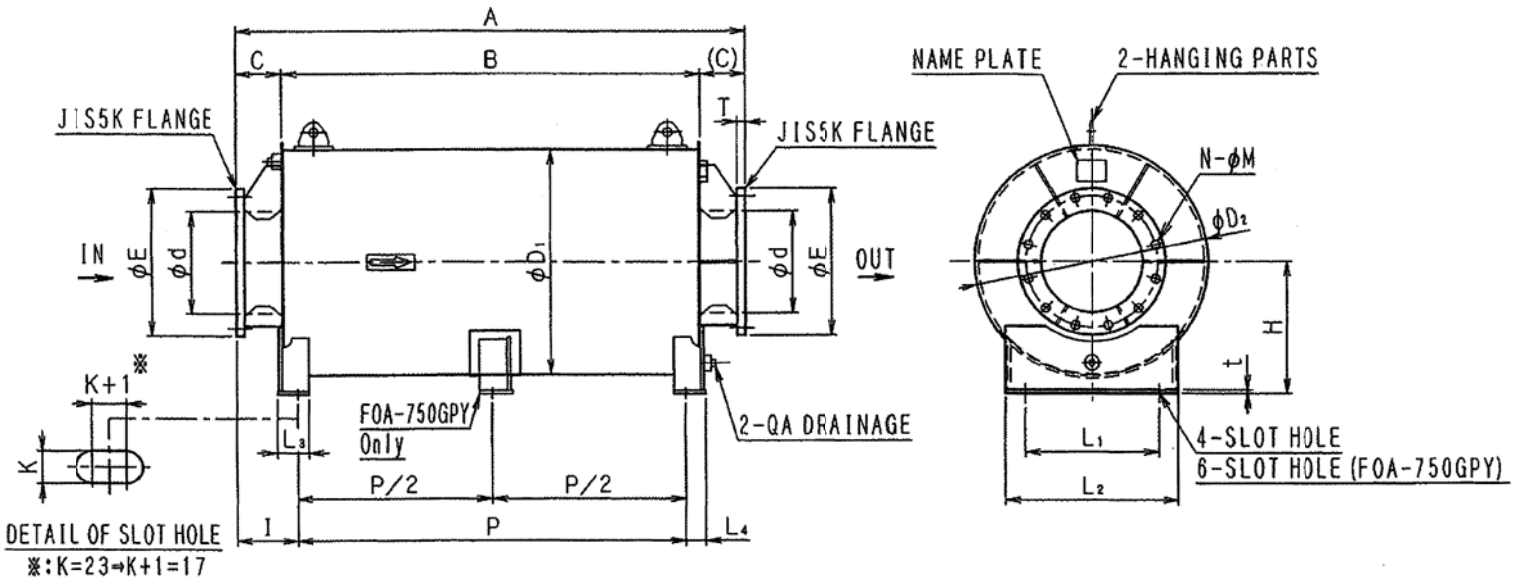

MEASURE (mm)

PART No.	TYPE	FLANGE SIZE	φd	A	B	C	φD1	φD2	φE	N	φM	T	H	I	P	L1	L2	L3	L4	t	K	Q	MASS (kg)
43100-053230	FOA- 200 GPY	200A	216.3	1470	1220	125	580	600	320	8	23	20	340	165	1140	350	450	80	46	6	19	20	180
43100-053240	FOA- 250 GPY	250A	267.4	1470	1220	125	670	690	385	12	23	22	385	165	1140	350	450	80	49	9	19	25	240
43100-053250	FOA- 300 GPY	300A	318.5	1825	1525	150	770	790	430	12	23	22	435	190	1445	500	600	80	49	9	19	25	330
43100-053260	FOA- 350 GPY	350A	355.6	1825	1525	150	900	920	480	12	25	24	500	190	1445	500	600	80	49	9	19	25	430 ⚠
43100-053270	FOA- 400 GPY	400A	406.4	2280	1980	150	1050	1070	540	16	25	24	600	195	1890	600	750	100	60	12	19	25	690
43100-053280	FOA- 450 GPY	450A	457.2	2400	2100	150	1190	1210	605	16	25	24	685	195	2010	600	750	100	60	12	23	25	890
43100-053290	FOA- 500 GPY	500A	508.0	2740	2440	150	1350	1370	655	20	25	24	750	205	2330	750	900	125	70	12	23	32	1130 ⚠
43100-053300	FOA- 550 GPY	550A	558.8	3090	2740	175	1440	1460	720	20	27	26	795	230	2630	750	900	125	70	16	23	32	1400 ⚠
43100-053310	FOA- 600 GPY	600A	609.6	3400	3050	175	1520	1540	770	20	27	26	835	230	2940	750	900	125	70	16	23	32	1890
43100-053320	FOA- 650 GPY	650A	660.4	3700	3350	175	1630	1650	825	24	27	26	890	230	3240	1000	1200	125	70	16	27	32	2250
43100-053330	FOA- 700 GPY	700A	711.2	4010	3660	175	1750	1770	875	24	27	26	950	245	3520	1000	1200	150	85	16	27	32	2560
43100-053340	FOA- 750 GPY	750A	762.0	4620	4270	175	1830	1850	945	24	33	28	990	245	4130	1000	1200	150	85	16	27	32	3890

REMARK
1. EXHAUST GAS VOLUME : 7540Nm³/h
2. EXH. GAS TEMP. (T/C OUTLET) : 370℃
3. PRESSURE LOSS : 2150Pa

SPEC.SILENCER	
DESIGN REREDUCED	25dB(A)O.A.
HEATPROOF TEMP.	500℃
MATERIAL	SS
PAINT	HEATPROOF SILVER

No.	PARTICULARS	Q'TY	MATERIAL	WEIGHT	PARTS No.

CUSTOMER	YANMAR CO., LTD.	LOCATION	FOR SHIP
TITLE	EXHAUST GAS SILENCER	TYPE	FOA-200GPY~750GPY
APPROVAL: S. Sudou	CHECKER: M. Tomita	DESIGNER: M. Tomita	TRACER: Y. Horisawa
SCALE	1/F	3rd Ang. PRJ.	
LINER MEASURE	mm / in	DATE	2008. 04. 02
PARTS No.	1155140~151-000		
FUJITEC MFG, CO., LTD.		DRAWING No.	1B3C697

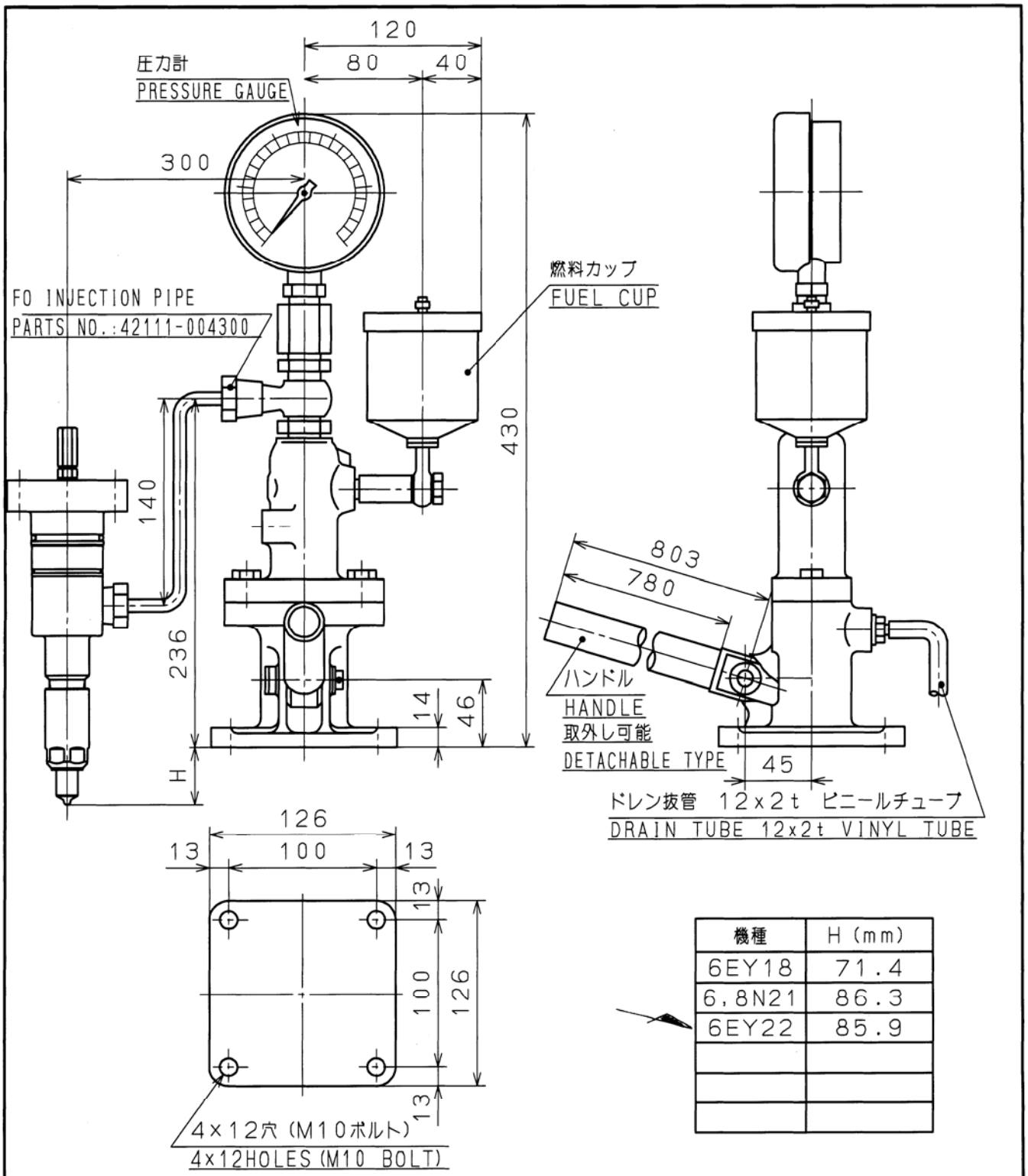

機種	H (mm)
6EY18	71.4
6,8N21	86.3
6EY22	85.9

燃料カップ容量 CAPACITY OF FUEL CUP	0.3ℓ
圧力計目盛範囲 GAUGE SCALE	0~100 MPa
質 量 MASS	8kg

ノズルテスタ
NOZZLE TESTER

ヤンマー株式会社
YANMAR CO., LTD.

DWG. No. B3-00005-0721

1. SYSTEM DIAGRAM FOR HEAT BALANCE (MIXED COOLING SYSTEM)

F.W. LOW TEMP.	T1= 36	℃
F.W. OUTLET TEMP. OF ENG.	Tf3= 85	℃
L.O. INLET TEMP. OF ENG.	t2= 65	℃

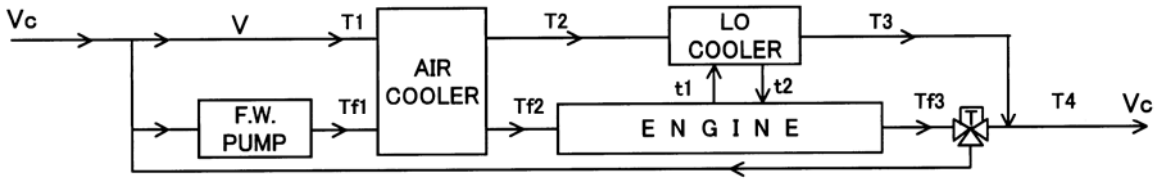

2. CALCULATION

2-1. QUANTITY OF HEAT TRANSMISSION

TO L.O :	Q1	=	700	MJ/h
TO AIR :	$Q2_L$	=	689	MJ/h
:	$Q2_H$	=	1264	MJ/h
TO F.W :	Q3	=	751	MJ/h

2-2. F.W. SYSTEM

F.W. TEMP. DIFFERENCE BETWEEN INLET & OUTLET OF AIR COOLER	$\Delta T1$	=	$\frac{Q2_L}{V * Rf * Cf}$	=	4.1 ℃
F.W. OUTLET TEMP. OF AIR COOLER	T2	=	$T1 + \Delta T1$	=	40.1 ℃
F.W. TEMP. DIFFERENCE BETWEEN INLET & OUTLET OF L.O. COOLER	$\Delta T2$	=	$\frac{Q1}{V * Rf * Cf}$	=	4.2 ℃
F.W. OUTLET TEMP. OF L.O. COOLER	T3	=	$T2 + \Delta T2$	=	44.3 ℃
F.W. TEMP. DIFFERENCE BETWEEN INLET & OUTLET OF ENGINE	$\Delta Tf2$	=	$\frac{Q3}{Vf * Rf * Cf}$	=	4.5 ℃
F.W. INLET TEMP. OF ENGINE	Tf2	=	$Tf3 - \Delta Tf2$	=	80.5 ℃
F.W. TEMP. DIFFERENCE BETWEEN INLET & OUTLET OF AIR COOLER	$\Delta Tf1$	=	$\frac{Q2_H}{Vf * Rf * Cf}$	=	7.5 ℃
F.W. INLET TEMP. OF AIR COOLER	Tf1	=	$Tf2 - \Delta Tf1$	=	73.0 ℃
F.W. CAPA. TO F.W. COOLER	Vc	=	$V + \frac{Q3+Q2_H}{(Tf3 - T1) * Rf * Cf}$	=	49.8 m^3/h
F.W. INLET TEMP. OF F.W. COOLER	T4	=	$\frac{T3 * V + Tf3 * (Vc-V)}{Vc}$	=	52.3 ℃

2-3. L.O. SYSTEM

L.O. TEMP. DIFFERENCE BETWEEN INLET & OUTLET OF L.O. COOLER	Δt	=	$\frac{Q1}{Vl * Rl * Cl}$	=	12.6 ℃
L.O. INLET TEMP. OF L.O. COOLER	t1	=	$t2 + \Delta t$	=	77.6 ℃
L.O. & F.W. MEAN TEMP. DIFFERENCE OF L.O. COOLER	Δtm	=	$\frac{(t1-T2)-(t2-T3)}{2.3Log((t1-T2)/(t2-T3))}$	=	28.3 ℃
COOLING AREA OF L.O. COOLER	A	=	$\frac{Q1}{\Delta tm * K}$	=	13.58 m^2 < 17.0 m^2

V	F.W. PUMP CAPA. FOR COOLER	40.0	m^3/h
Vf	F.W. PUMP CAPA. FOR ENGINE	40.0	m^3/h
Rf	DENSITY OF F.W.	1000	kg/m^3
Cf	SPECIFIC HEAT OF F.W.	4.19	kJ/(kg·℃)
Vl	L.O PUMP CAPACITY	32.7	m^3/h
Rl	DENSITY OF L.O.	900	kg/m^3
Cl	SPECIFIC HEAT OF L.O.	1.88	kJ/(kg·℃)
K	OVERALL HEAT TRANSFER COEFFICIENT OF L.O. COOLER	1.82	MJ/(m^2·℃·h)

THE CALCULATION FOR HEAT BALANCE	DRAW. NO.	D3 - 50633 - 0390
MODEL : 6EY22ALW DIESEL ENGINE (1300 kW / 900 min^{-1})		
YANMAR CO., LTD.		

軸系ねじり振動計測結果
THE REPORT FOR THE TORSIONAL VIBRATION

1. 計測日
   Measuring Date : 2014/3/5

2. 計測器　電気式ねじり振動記録計
   Torsiograph : Electric Torsiograph

3. 計測位置　発電機軸反直結側自由端
   Measuring Point : Free End of Generator Shaft

4. 実測振動数
   Natural Frequency : I Node : abt. 4740 cpm

5. 最大応力の生ずる軸およびその軸径
   Actual Dia. of the shaft At the Question:

   発電機軸　　軸径
   Generator Shaft : Dia. : 200 mm

6. 最大付加応力線図
   The Max. Torsional Vibration Stress Diagram :

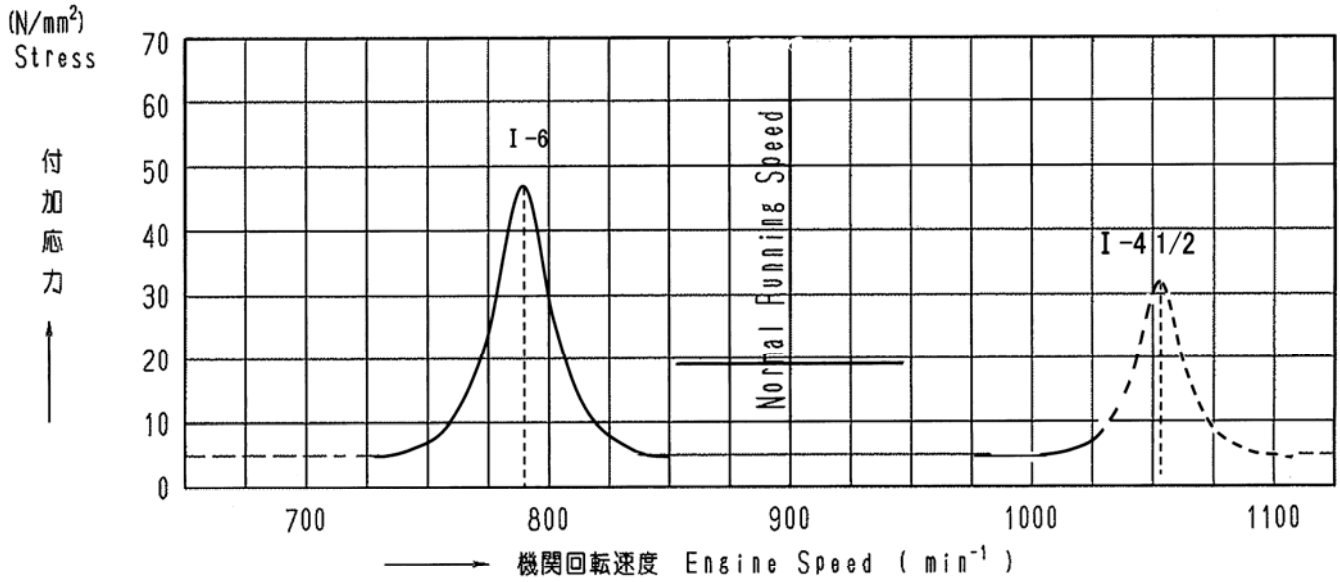

7. 回避回転速度表示範囲
   Barred Speed Range : 737 ～ 815 min^{-1}

8. 上記計測結果より軸系ねじり振動は問題ありません
   There is no problem in the torsional vibration of the shaft system from the above mentioned measurement result

Designing Department		Customer	DALIAN COSCO KHI SHIP ENGINEERING CO.,LTD		
Drawn By	Y. Morikawa	Work No.	R3-B18601		
Checked By	K. Ishibashi	Rule	LR	S.No.	DE014
Approved By	K. [illegible]	Model	6EY22ALW X 1120 kW (TAIYO) (1300 kW / 900 min^{-1})		
YANMAR CO.,LTD. LARGE POWER PRODUCTS OPERATIONS DIVISION DEVELOPMENT DEPT. ENGINEERING DEPT., MARINE GROUP		Date	2014/3/26	Draw. No.	T3-50633-1008

SPARE PARTS	PAGE	1
	SHIP NO.	DE014
	BOX NO.	

MODEL 6EY22ALW DIESEL ENGINE (3) ENGS.

No	NAME	SKETCH	MATERIAL	SUPPLY PER SHIP WORK-ING	SUPPLY PER SHIP SPARE	PART NO.	REMARKS
1	MAIN BEARING METAL ASSY. ｼｭｼﾞｸｳｹﾒﾀﾙｼｸﾐ	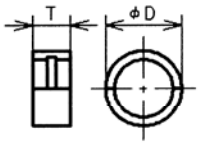 SIZE (mm) L: D:230 T:75 MASS: 1.9 kg	S10C A40	21	1	15063302350	
2	THRUST METAL ASSY. ｽﾗｽﾄﾒﾀﾙｼｸﾐ	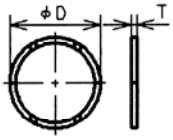 SIZE (mm) L:- D:270 T:5.95 MASS: 0.4 kg	SPES A40	6	2	15063302380	
3	BOLT ASSY. (MAIN BEARING) ｼｭｼﾞｸｳｹﾎﾞﾙﾄｼｸﾐ	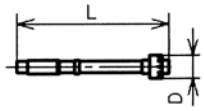 SIZE (mm) L:514 D:54 T:- MASS: 4.5 kg	SCM435 S45C	42 SETS	2 SETS	C5060002121	WITH NUT
4	SUCTION VALVE ASSY. ｷｭｳｷﾍﾞﾝｼｸﾐ	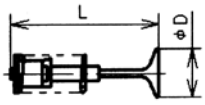 SIZE (mm) L:344 D:73 T:- MASS: 2.0 kg	SUH37 FC200 SWPV (ASSY.)	36 SETS	2 SETS	C5060011250	WITH VALVE SEAT
5	EXHAUST VALVE ASSY. ﾊｲｷﾍﾞﾝｼｸﾐ (ﾅｲﾓﾆｯｸ)	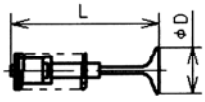 SIZE (mm) L:344 D:73 T:- MASS: 2.0 kg	NCF80A FC200 SWPV (ASSY.)	36 SETS	4 SETS	C5060011261	WITH VALVE SEAT
6	OUTER SPRING FOR SUCTION AND EXHAUST VALVE ｿﾄｶﾞﾜｷｳﾊｲｷﾍﾞﾝﾖｳﾍﾞﾝﾊﾞﾈ	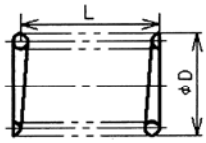 SIZE (mm) L:114 D:66 T:- MASS: 0.36 kg	SWPV	72	1	15063311460..3	
7	INNER SPRING FOR SUCTION AND EXHAUST VALVE ｳﾁｶﾞﾜｷｳﾊｲｷﾍﾞﾝﾖｳﾍﾞﾝﾊﾞﾈ	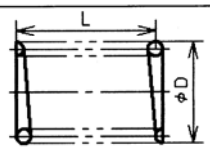 SIZE (mm) L:102 D:47.5 T:- MASS: 0.21 kg	SWPV	72	1	15063311470..3	
8	PISTON PIN ASSY. ﾋﾟｽﾄﾝﾋﾟﾝ ｼｸﾐ	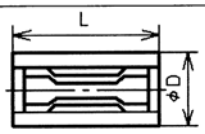 SIZE (mm) L:181 D:95 T:- MASS: 8.0 kg	SCM415 STKM11	18	1	15063322300..D	

MFR'S NAME & ADDRESS	YANMAR CO., LTD. HIGASHI-DORI NAGASU, AMAGASAKI, JAPAN.

W. NO. R3B18601 6EY22ALW 担当.. ﾓﾘｶﾜ 2013.10.03

SPARE PARTS	PAGE	2
	SHIP NO.	DE014
	BOX NO.	

MODEL 6EY22ALW DIESEL ENGINE (3) ENGS.

No	NAME	SKETCH	MATERIAL	SUPPLY PER SHIP WORK-ING	SUPPLY PER SHIP SPARE	PART NO.	REMARKS
9	NO. 1 PISTON RING NO. 1 ﾋﾟｽﾄﾝﾘﾝｸﾞ	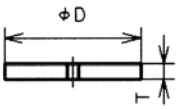 SIZE (mm) L:- D:220 T:6.0 MASS: 0.2 kg	P221	18	1	15063322110..3	
10	NO. 2 PISTON RING NO. 2 ﾋﾟｽﾄﾝﾘﾝｸﾞ	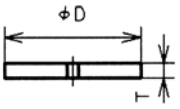 SIZE (mm) L:- D:220 T:6.0 MASS: 0.18 kg	P111	18	1	15063322240..3	
11	OIL RING WITH COIL EXPANDER ｺｲﾙｴｷｽﾊﾟﾝﾀﾞﾂｷ ｵｲﾙﾘﾝｸﾞ	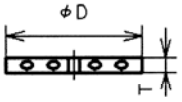 SIZE (mm) L:- D:220 T:9 MASS: 0.17 kg	P111 P632	18	1	15063322280..3	
12	METAL FOR PISTON PIN ﾋﾟｽﾄﾝﾋﾟﾝﾒﾀﾙ	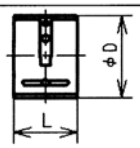 SIZE (mm) L:79 D:103 T:- MASS: 0.1 kg	L10 SPCE	18	1	15063323110..3	
13	CRANK PIN METAL ASSY. ｸﾗﾝｸﾋﾟﾝﾒﾀﾙｼｸﾐ	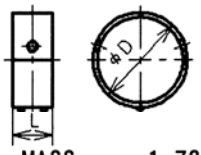 SIZE (mm) L:78 D:190 T:- MASS: 1.72 kg	A17X	18	1	15063323380	
14	NUT (ROD BOLT ﾅｯﾄ(ﾛｯﾄﾞﾎﾞﾙﾄ	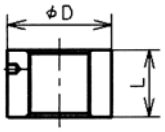 SIZE (mm) L:35 D:54 T:- MASS: 0.4 kg	S45C	36	2	14667301212..3	
15	ROD BOLT. (CONNECTING ROD ﾛｯﾄﾞ ﾎﾞﾙﾄ	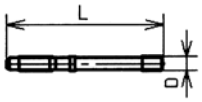 SIZE (mm) L:282 D:34 T:- MASS: 1.66 kg	SNCM630	36	2	15063323201..3	
16	VALVE FOR SAFETY VALVE OF L.O. PUMP ﾍﾞﾝ(LOP ｱﾝｾﾞﾝﾍﾞﾝ	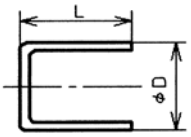 SIZE (mm) L:55.5 D:30 T:- MASS: 0.14 kg	S25C	3	1	12863332410..3	

MFR'S NAME & ADDRESS	YANMAR CO., LTD. HIGASHI-DORI NAGASU, AMAGASAKI, JAPAN.

W. NO. R3B18601 6EY22ALW 担当.. ﾓﾘｶﾜ 2013. 10. 03

SPARE PARTS	PAGE	3
MODEL 6EY22ALW DIESEL ENGINE (3) ENGS.	SHIP NO.	DE014
	BOX NO.	

No	NAME	SKETCH	MATERIAL	SUPPLY PER SHIP WORK-ING	SUPPLY PER SHIP SPARE	PART NO.	REMARKS
17	SPRING FOR SAFETY VALVE OF L.O. PUMP ﾊﾞﾈ(LOP ｱﾝｾﾞﾝﾍﾞﾝ	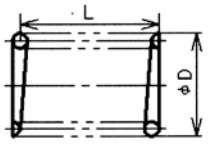 SIZE (mm) L:85 D:22.5 T:- MASS: 0.05 kg	SWPB	3	1	12863332420..3	
18	VALVE & SPRING FOR L.O. PRESS. CONTROL VALVE LO ﾁｮｳｱﾂﾍﾞﾝ ﾖｳ ﾍﾞﾝ,ﾍﾞﾝﾊﾞﾈ	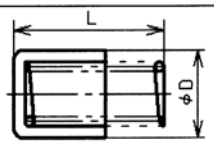 SIZE (mm) L:124 D:45 T:- MASS: 0.4 kg	S35C SWPA	3 SETS	1 SET	C4760034020	
19	DELIVERY VALVE ASSY. FOR F.O. INJECTION PUMP FO ﾄｼｭﾂﾍﾞﾝｼｸﾐ	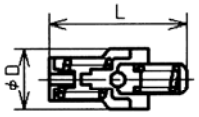 SIZE (mm) L:53 D:18 T: MASS: 0.3 kg	ASSY.	18	1	15169551330..3	
20	PLUNGER ASSY. FOR FUEL INJECTION PUMP FO ﾌﾝｼｬﾎﾟﾝﾌﾟﾖｳ ﾌﾟﾗﾝｼﾞｬｼｸﾐ	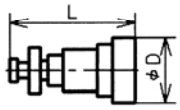 SIZE (mm) L:202 D:130 T:- MASS: 5.4 kg	ASSY.	18	1	15063351600..3	
21	PLUNGER SPRING FOR F.O. INJECTION PUMP FO ﾌﾝｼｬﾎﾟﾝﾌﾟﾖｳ ﾌﾟﾗﾝｼﾞｬﾊﾞﾈ	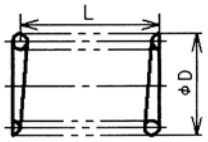 SIZE (mm) L:120 D:57 T:- MASS: 0.49 kg	SWOSCV	18	1	15063351170..3	
22	FUEL INJECTION VALVE ASSY. FO ﾌﾝｼｬﾍﾞﾝｼｸﾐ	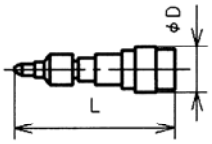 SIZE (mm) L:229 D:50 T: MASS: 1.8 kg	ASSY.	18 SETS	3 SETS	C5060053100	
23	F.O. INJECTION PIPE FO ﾌﾝｼｬｶﾝ	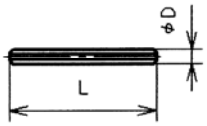 SIZE (mm) L:273 D:15 T:- MASS: 0.3 kg	SCM435	18	1	15063359260..D	
24	VALVE FOR F.O. PRESS. CONTROL VALVE FO ﾁｮｳｱﾂﾍﾞﾝﾖｳ ﾍﾞﾝ	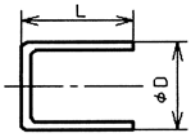 SIZE (mm) L:28 D:20 T:- MASS: 0.03 kg	S45C	3	1	14164659940..3	
MFR'S NAME & ADDRESS	YANMAR CO., LTD. HIGASHI-DORI NAGASU, AMAGASAKI, JAPAN.						

W.NO. R3B18601 6EY22ALW 担当.. ﾓﾘｶﾜ 2013.10.03

SPARE PARTS	PAGE	4
MODEL 6EY22ALW DIESEL ENGINE (3) ENGS.	SHIP NO.	DE014
	BOX NO.	

No	NAME	SKETCH	MATERIAL	SUPPLY PER SHIP WORK-ING	SUPPLY PER SHIP SPARE	PART NO.	REMARKS
25	SPRING FOR F.O. PRESS. CONTROL VALVE FO ﾁｮｳｱﾂﾍﾞﾝﾖｳ ﾍﾞﾝﾊﾞﾈ	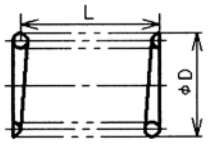 SIZE (mm) L:66.5 D:14.8 T:- MASS: 0.016 kg	SWPB	3	1	41660003020..3	
26	SPACER ｶﾝｻﾞ (FO ﾍﾞﾝﾉｽﾞﾙ	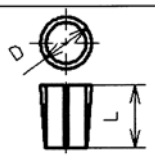 SIZE (mm) L:18.8 D:15.3 T: MASS: 0.015 kg	C1220	18	6	14667311622..3	
27	RETAINER ｶﾝｻﾞ ｵｻｴ	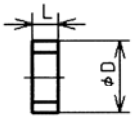 SIZE (mm) L:3.5 D:15 T: MASS: 0.001 kg	TEFLON	18	6	15063311850..3	
28	PACKING FOR CYLINDER HEAD ｼﾘﾝﾀﾞ ﾍｯﾄﾞﾊﾟｯｷﾝ	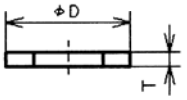 SIZE (mm) L:- D:296 T:1.0 MASS: 0.07 kg	SUS304	18	1	15063301340 A	
29	PACKING FOR INLET OF CYLINDER HEAD ｼﾘﾝﾀﾞ ﾍｯﾄﾞ ｲﾘｸﾞﾁ ﾖｳ ﾊﾟｯｷﾝ	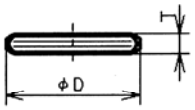 SIZE (mm) L:- D:125 T:15 MASS: 0.03 kg	RUBBER	18	1	15063312310..3	
30	GASKET FOR EXHAUST OUTLET OF CLYINDER HEAD ｼﾘﾝﾀﾞ ﾍｯﾄﾞ ﾖｳﾊｲｷ ﾃﾞｸﾞﾁﾖｳｶﾞｽｹｯﾄ	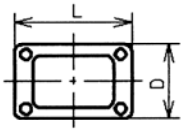 SIZE (mm) L:155 D:142 T:1.65 MASS: 0.2 kg	SPCC EGS ASSY.	18	1	15063313480..3	
31	PACKING FOR CYLINDER LINER ｼﾘﾝﾀﾞ ﾗｲﾅ ﾊﾟｯｷﾝ	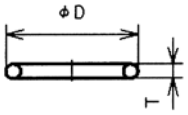 SIZE (mm) L:- D:247 T:6.6 MASS: 0.04 kg	RUBBER	18	1	14764401320 A	
32	PACKING FOR CYLINDER LINER ｼﾘﾝﾀﾞ ﾗｲﾅ ﾊﾟｯｷﾝ	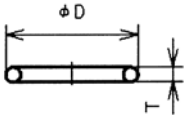 SIZE (mm) L:- D:245 T:6.6 MASS: 0.04 kg	RUBBER	18	1	14764601320 A	
MFR'S NAME & ADDRESS	YANMAR CO., LTD. HIGASHI-DORI NAGASU, AMAGASAKI, JAPAN.						

W. NO. R3B18601 6EY22ALW 担当.. ﾓﾘｶﾜ 2013. 10. 03

SPARE PARTS	PAGE	5
	SHIP NO.	DE014
	BOX NO.	

MODEL 6EY22ALW DIESEL ENGINE (3) ENGS.

No	NAME	SKETCH	MATERIAL	SUPPLY PER SHIP WORK-ING	SUPPLY PER SHIP SPARE	PART NO.	REMARKS
33	O-RING FOR HYDRAULIC JACK ｺｱﾂｼﾞｬｯｷ O-ﾘﾝｸﾞ	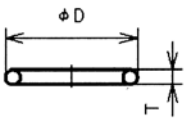 SIZE (mm) L:- D:60.6 T:3.1 MASS: 0.002 kg	RUBBER		4	24321000550 Q	1A-G55
34	O-RING FOR HYDRAULIC JACK ｺｱﾂｼﾞｬｯｷ O ﾘﾝｸﾞ	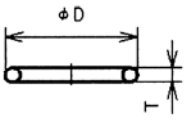 SIZE (mm) L:- D:121 T:3.1 MASS: 0.002 kg	RUBBER		4	24321001150 A	1A-G115
35	BACK-UP RING FOR HYDRAULIC JACK ｺｱﾂｼﾞｬｯｷ ﾊﾞｯｸｱｯﾌﾟﾘﾝｸﾞ	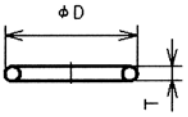 SIZE (mm) L:- D:60 T:1.25 MASS: 0.001 kg	RUBBER		4	24375000550 A	T2-G55
36	BACK-UP RING FOR HYDRAULIC JACK ｺｱﾂｼﾞｬｯｷ ﾊﾞｯｸｱｯﾌﾟﾘﾝｸﾞ	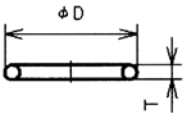 SIZE (mm) L:- D:120 T:1.25 MASS: 0.001 kg	RUBBER		4	24375001150..3	T2-G115
37	FILTER RING ﾌｨﾙﾀｰﾘﾝｸﾞ	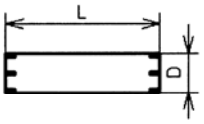 SIZE (mm) L:1630 D:220 T: MASS: kg	PURCHA-SE	3	3	14788318950..3	
38	O-RING (ROTOR FOR CENTRIFUGAL OIL FILTER O ﾘﾝｸﾞ (ﾛｰﾀ ｴﾝｼﾝｺｼｷﾖｳ	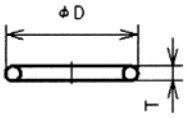 SIZE (mm) L:- D:156 T:5.3 MASS: 0.010 kg	PURCHA-SE	3 SETS	1 SET	75360535410 B	
39	O-RING (BASE FOR CENTRIFUGAL OIL FILTER O ﾘﾝｸﾞ (ﾍﾞｰｽ ｴﾝｼﾝｺｼｷﾖｳ	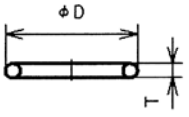 SIZE (mm) L:- D:207 T:5.3 MASS: 0.030 kg	PURCHA-SE	3 SETS	1 SET	75360535430 B	
40	PAPER INSERT FOR CENTRIFUGAL OIL FILTER ｴﾝｼﾝｺｼｷﾖｳ ﾍﾟｰﾊﾟｰｲﾝｻｰﾄ	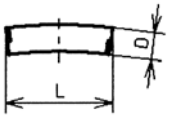 SIZE (mm) L:455 D:120 T:0.2 MASS: 0.010 kg	PAPER	3 SETS	1 SET	75360535451 B	5SHEETS /1SET

MFR'S NAME & ADDRESS	YANMAR CO., LTD. HIGASHI-DORI NAGASU, AMAGASAKI, JAPAN.

W. NO. R3B18601 6EY22ALW 担当.. ﾓﾘｶﾜ 2013. 10. 03

SPARE PARTS	PAGE	6
	SHIP NO.	DE014
	BOX NO.	

MODEL 6EY22ALW DIESEL ENGINE (3) ENGS.

No	NAME	SKETCH	MATERIAL	SUPPLY PER SHIP WORK-ING	SUPPLY PER SHIP SPARE	PART NO.	REMARKS
41	SPRING FOR START. & STOP. DEVICE ﾊｯﾃｲｿｳﾁﾖｳﾊﾞﾈ	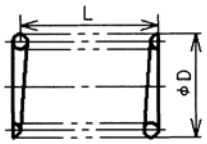 SIZE (mm) L:42 D:9.2 T:- MASS: 0.005 kg	SWPB	3	1	13014066540..3	
42	SPRING FOR FUEL OIL INJECTION PUMP PACK FO ﾌﾝｼｬﾎﾟﾝﾌﾟﾗｯｸﾖｳﾊﾞﾈ	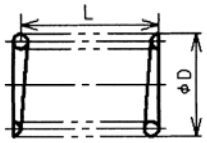 SIZE (mm) L:26 D:10.7 T: MASS: 0.003 kg	SWPB	18	1	13760051540..3	
43	SPRING (FORNO.1 LEVER ﾊﾞﾈ(NO.1ﾚﾊﾞｰｼﾞｸﾖｳ	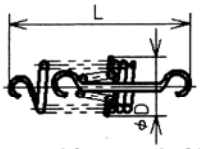 SIZE (mm) L:80 D:14.3 T: MASS: 0.02 kg	SWPB	3	1	13861366920..3	
44	SPRING (NO.1 LEVER FOR GOVERNOR) ｶﾞﾊﾞﾅ NO.1ﾚﾊﾞｰｼﾞｸﾖｳﾊﾞﾈ	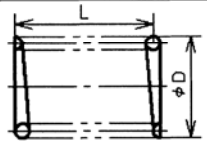 SIZE (mm) L:50 D:27.5 T:- MASS: 0.05 kg	SWPB	18	1	13965366780..3	
45	SPRING FOR CONNECTOR ﾚﾝｹﾂｶﾝﾖｳﾊﾞﾈ	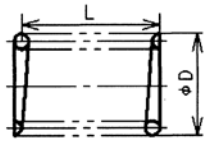 SIZE (mm) L:105 D:22.6 T:- MASS: 0.04 kg	SWPB	3	1	15169566430 A	
46	SPRING FOR CONNECTOR ﾚﾝｹﾂｶﾝﾖｳﾊﾞﾈ	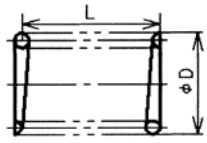 SIZE (mm) L:80 D:27.5 T:- MASS: 0.021 kg	SWP-B	3	1	13467366420..3	
47	BALL BEARING (DRIVING FOR GOVERNOR) ﾀﾏｼﾞｸｳｹ (ｶﾞﾊﾞﾅｸﾄﾞｳﾖｳ)	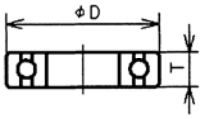 SIZE (mm) L:- D:47 T:12 MASS: 0.08 kg	PURCHA-SE	3	1	24101060054 A	JIS NO. 6005
48	BALL BEARING (DRIVING FOR GOVERNOR) ﾀﾏｼﾞｸｳｹ (ｶﾞﾊﾞﾅｸﾄﾞｳﾖｳ)	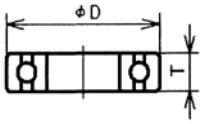 SIZE (mm) L:- D:52 T:15 MASS: 0.13 kg	PURCHA-SE	3	1	24101062054 A	JIS NO. 6205

MFR'S NAME & ADDRESS	YANMAR CO., LTD. HIGASHI-DORI NAGASU, AMAGASAKI, JAPAN.

W. NO. R3B18601 6EY22ALW 担当.. ﾓﾘｶﾜ 2013.10.03

SPARE PARTS	PAGE	7
	SHIP NO.	DE014
	BOX NO.	

MODEL 6EY22ALW DIESEL ENGINE (3) ENGS.

No	NAME	SKETCH	MATERIAL	SUPPLY PER SHIP WORK-ING	SUPPLY PER SHIP SPARE	PART NO.	REMARKS
49	THERMOMETER FOR C.W. (CYL. OUTLET) ｵﾝﾄﾞｹｲ	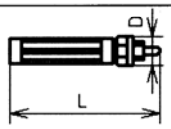 SIZE (mm) L:171 D:27.7 T:- MASS: 0.2 kg	PURCHA-SE	3	1	14667391310..3	120°C G3/8
50	BATTERY FOR DIGITAL THERMOMETER ﾘﾁｳﾑﾃﾞﾝﾁ ﾃﾞｼﾞﾀﾙｵﾝﾄﾞｹｲﾖｳ	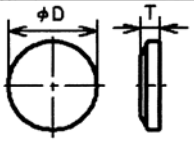 SIZE (mm) L:- D:24.5 T:5 MASS: 0.007 kg	PURCHA-SE		2	14788391350..3	FOR SPARE THERMO-METER
51	THERMOMETER FOR FUEL OIL ﾈﾝﾘｮｳﾕｵﾝﾄﾞｹｲ	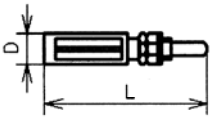 SIZE (mm) L:177 D:24 T:- MASS: 0.2 kg	PURCHA-SE	3	1	15063391290..3	200°C G3/8
52	THERMOMETER DIGITAL TYPE EXH (EACH CYL.) ﾊｲｷｵﾝﾄﾞｹｲ ﾊｲｷ(ｶｸﾄｳ)	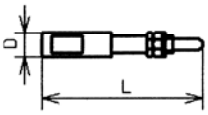 SIZE (mm) L:413 D:36 T:- MASS: 0.65 kg	PURCHA-SE	18	1	15063391336..3	650°C G1/2
53	THERMOMETER DIGITAL TYPE EXH (T/C-IN, OUT) ﾃﾞｼﾞﾀﾙｵﾝﾄﾞｹｲ ﾊｲｷ(T/Cﾃﾞｲﾘｸﾞﾁ	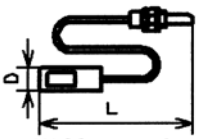 SIZE (mm) L:3300 D:36 T:- MASS: 0.78 kg	PURCHA-SE	9	1	15063391346..3	650°C G1/2
54	THERMOMETER C.W., L.O. ｵﾝﾄﾞｹｲ	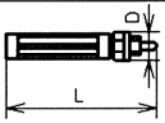 SIZE (mm) L:151 D:27.7 T:- MASS: 0.135 kg	PURCHA-SE		1	28551030300..3	100°C G3/8
55	THERMOMETER SUCTION AIR C.W. ｵﾝﾄﾞｹｲ	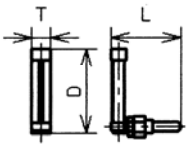 SIZE (mm) L:94.5 D:114 T:25 MASS: 0.200 kg	PURCHA-SE	9	1	42130012860..3	100°C G3/8
56	PACKING FOR THERMOMETER ｵﾝﾄﾞｹｲﾖｳ ﾊﾟｯｷﾝ	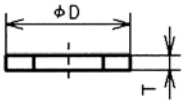 SIZE (mm) L:- D:25 T:0.25 MASS: 0.001 kg	CUP1-O		20	23414170250..3	

MFR'S NAME & ADDRESS	YANMAR CO., LTD. HIGASHI-DORI NAGASU, AMAGASAKI, JAPAN.

W.NO. R3B18601 6EY22ALW 担当.. ﾓﾘｶﾜ 2013.10.03

SPARE PARTS	PAGE	8
MODEL 6EY22ALW DIESEL ENGINE (3) ENGS.	SHIP NO.	DE014
	BOX NO.	

No	NAME	SKETCH	MATERIAL	SUPPLY PER SHIP WORK-ING	SUPPLY PER SHIP SPARE	PART NO.	REMARKS
57	PACKING FOR THERMOMETER ｵﾝﾄﾞｹｲﾖｳ ﾊﾟｯｷﾝ	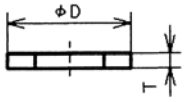 SIZE (mm) L:- D:25 T:0.5 MASS: 0.001 kg	CUP1-0		10	23414170500..3	
58	PACKING FOR THERMOMETER ｵﾝﾄﾞｹｲﾖｳ ﾊﾟｯｷﾝ	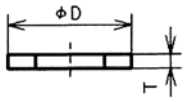 SIZE (mm) L:- D:30 T:1.0 MASS: 0.001 kg	CUP1-0		10	23414210000..3	
59	BATTERY FOR DIGITAL THERMOMETER ﾘﾁｳﾑﾃﾞﾝﾁ ﾃﾞｼﾞﾀﾙｵﾝﾄﾞｹｲﾖｳ	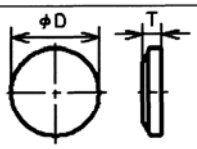 SIZE (mm) L:- D:24.5 T:5 MASS: 0.007 kg	PURCHA-SE		27	14788391350 A	FOR THERMO-METER WITH ENGINE
		SIZE (mm) L: D: T: MASS: kg					
		SIZE (mm) L: D: T: MASS: kg					
		SIZE (mm) L: D: T: MASS: kg					
		SIZE (mm) L: D: T: MASS: kg					
	SPARE PARTS BOX ﾖﾋﾞﾋﾝﾊﾞｺ	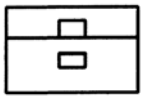 SIZE (mm) L: D: T: MASS: kg					

MFR'S NAME & ADDRESS	YANMAR CO., LTD. HIGASHI-DORI NAGASU, AMAGASAKI, JAPAN.

W. NO. R3B18601 6EY22ALW 担当.. ﾓﾘｶﾜ 2013. 10. 03

TOOLS	750633-92054	PAGE	1/7
MODEL : EY22 DIESEL ENGINE		SHIP NO.	
		BOX NO.	

No	NAME	SKETCH	MATERIAL	SUPPLY PER SHIP WORKING	SUPPLY PER SHIP SPARE	PART NO.	REMARKS
1	DOUBLE ENDED SPANNER 両口ｽﾊﾟﾅ	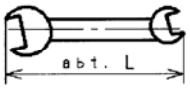					
		SIZE:(mm) L: / MASS:(kg)					
	10x13	130 / 0.06	S45C	1		28110100130	
	17x19	180 / 0.20	S45C	1		28110170190	
	22x24	218 / 0.23	S45C	1		28110220240	
	27x30	267 / 0.49	S45C	1		28110270300	
	32x36	305 / 0.55	S45C	1		28110320360	
	41x46	378 / 1.00	S45C	1		28110410460	
2	ADJUSTABLE ANGLE WRENCH ﾓﾝｷｰﾚﾝﾁ	 SIZE (mm) L: 205 D: - T: -	PURCHASE	1		28120002000	
	200	MASS: 0.33 kg					
3	OFFSET WRENCH ﾒｶﾞﾈﾚﾝﾁ	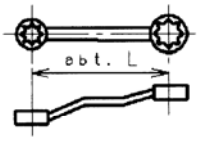 SIZE (mm) L: 255 D: - T: -	S55C	1		28160170190	
	17x19	MASS: 0.26 kg					
4	RATCHET HANDLE FOR TURNING ﾀｰﾆﾝｸﾞ用 ﾗﾁｪｯﾄﾊﾝﾄﾞﾙ	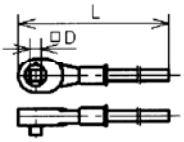 SIZE (mm) L: 500 D: 19 T: -	PURCHASE	1		14767392851	
		MASS: 1.925 kg					
5	SOCKET ｿｹｯﾄ	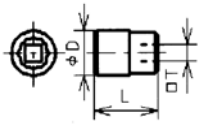					
		SIZE(mm) L: / D: / T: / MASS (kg)					
	24	55 / 33.0 / 19.1 / 0.20	PURCHASE	1		42111001850	
	27	48 / 39.0 / 19.1 / 0.10	PURCHASE	1		42111001860	
	36	58 / 51.0 / 19.1 / 0.30	PURCHASE	1		42112002740	
6	SCREW DRIVER ﾈｼﾞﾏﾜｼ	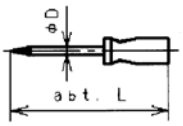					
		SIZE:(mm) L: / D: / MASS (kg)					
	(-)	180 / 6 / 0.07	PURCHASE	1		28130061000	
	(+)	220 / 8 / 0.12	PURCHASE	1		28140081000	

MFR'S NAME & ADDRESS	YANMAR CO.,LTD. HIGASHI-DORI NAGASU, AMAGASAKI, JAPAN.

2013.10.31

TOOLS	750633-92054	PAGE	2/7
MODEL : EY22 DIESEL ENGINE		SHIP NO.	
		BOX NO.	

No	NAME	SKETCH	MATERIAL	SUPPLY PER SHIP WORKING	SUPPLY PER SHIP SPARE	PART NO.	REMARKS
7	PLIERS FOR CIRCLIP (ST2:FOR SHAFT) ｻｰｸﾘｯﾌﾟ用ﾌﾟﾗｲﾔ (軸用)	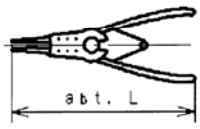 SIZE (mm) L: 180 D: - T: - MASS: 0.1 kg	PURCHASE	1		28190000020	
8	PLIERS FOR CIRCLIP (ST2N:FOR SHAFT) ｻｰｸﾘｯﾌﾟ用ﾌﾟﾗｲﾔ (軸用)	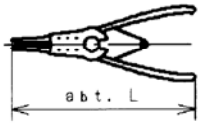 SIZE (mm) L: 245 D: - T: - MASS: 0.2 kg	PURCHASE	1		28190002020	
9	PLIERS FOR CIRCLIP (RT4:FOR HOLE) ｻｰｸﾘｯﾌﾟ用ﾌﾟﾗｲﾔ (穴用)	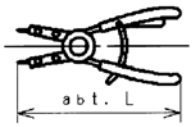 SIZE (mm) L: 420 D: - T: - MASS: 0.3 kg	PURCHASE	1		28190000140	
10	EYEBOLT ｱｲﾎﾞﾙﾄ	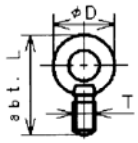 SIZE (mm) / MASS (kg) L: D: T: M8 48 32.6 M8 0.04 M12 73 50 M12 0.10					
	M8		SS400	2		26617080002	
	M12		SS400	2		26617120002	
11	OIL FEEDER 油ｻｼ	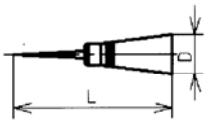 SIZE (mm) L: 181 D: 51 T: - MASS: 0.02 kg	PURCHASE	1		28210000140	
12	OIL FEEDER 油ｻｼ	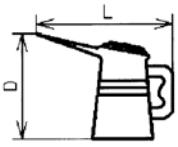 SIZE (mm) L: 280 D: 240 T: - MASS: 0.17 kg	PURCHASE	1		28210000130	
13	THICKNESS GAUGE FOR SUCTION AND EXHAUST VALVE 給排気弁隙間調整用具	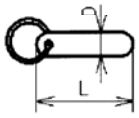 SIZE (mm) L: 75 D:12.5 T: 0.4 T: 0.5 MASS: 0.001 kg	SK5M	1		28312004050	
MFR 'S NAME & ADDRESS	YANMAR CO., LTD. HIGASHI-DORI NAGASU, AMAGASAKI, JAPAN.						

TOOLS	750633-92054	PAGE	3/7
MODEL : EY22 DIESEL ENGINE		SHIP NO.	
		BOX NO.	

No	NAME	SKETCH	MATERIAL	SUPPLY PER SHIP WORKING	SUPPLY PER SHIP SPARE	PART NO.	REMARKS
14	HEXAGON WRENCH KEY FOR PRESSURE SWITCH 圧力ｽｲｯﾁ用 六角棒ｽﾊﾟﾅ	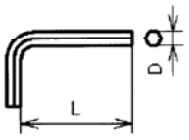 SIZE (mm) L: 70 D: 4 T: – MASS: 0.010 kg	SCM435	1		28150040000	
15	HEXAGON WRENCH KEY FOR PRESSURE SWITCH 圧力ｽｲｯﾁ用 六角棒ｽﾊﾟﾅ	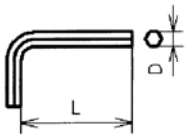 SIZE (mm) L: 80 D: 5 T: – MASS: 0.018 kg	SCM435	1		28150050000	
16	HEXAGON WRENCH KEY FOR FUEL INJECTION PUMP 燃料噴射ﾎﾟﾝﾌﾟ分解用 六角棒ｽﾊﾟﾅ	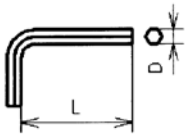 SIZE (mm) L: 90 D: 6 T: – MASS: 0.029 kg	SCM435	1		28150060000	
17	HEXAGON WRENCH KEY FOR FUEL INJECTION PUMP 燃料噴射ﾎﾟﾝﾌﾟ分解用 六角棒ｽﾊﾟﾅ	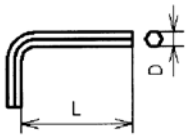 SIZE (mm) L: 100 D: 8 T: – MASS: 0.058 kg	SCM435	1		28150080000	
18	SETTING AND EXTRACTING TOOL FOR PLUNGER GUIDE OF FUEL INJECTION PUMP 燃料噴射ﾎﾟﾝﾌﾟ ﾌﾟﾗﾝｼﾞｬｶﾞｲﾄﾞ着脱用具	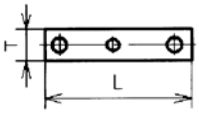 SIZE (mm) L: 162 D: – T: 32 MASS: 0.33 kg	SS400 S45C S45C	1 2 1 2		15063392900 26206121002 26206120454 26706120002	 M12x100BOLT M12x45 BOLT M12 NUT
19	SETTING TOOL FOR PISTON ﾋﾟｽﾄﾝ挿入用具	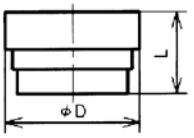 SIZE (mm) L: 160 D: 267.4 T: – MASS: 8.3 kg	STKM13A	1		15063392140	
20	DISASSEMBLY TOOL FOR NOZZLE SLEEVE ﾉｽﾞﾙｽﾘｰﾌﾞ分解用具	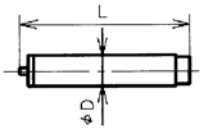 SIZE (mm) L: 175 D: 48 T: – MASS: 2.4 kg	S45C	1		14667392250	
21	LIFTING TOOL FOR CYLINDER HEAD (A) ｼﾘﾝﾀﾞﾍｯﾄﾞ吊上用具	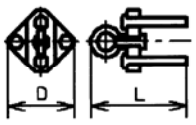 SIZE (mm) L: 188 D: 130 T: – MASS: 2.2 kg	SS400 SS400 SS400 S45C S45C	1 1 1 2 2		15063392310 26620160002 26116160502 26152160402 14667392320	 M16 EYENUT M16x50 BOLT M16x40 BOLT TOOL B
MFR 'S NAME & ADDRESS	YANMAR CO., LTD. HIGASHI-DORI NAGASU, AMAGASAKI, JAPAN.						

2013.10.31

TOOLS	750633-92054	PAGE	4/7
MODEL : EY22 DIESEL ENGINE		SHIP NO.	
		BOX NO.	

No	NAME	SKETCH	MATERIAL	SUPPLY PER SHIP WORK-ING	SUPPLY PER SHIP SPARE	PART NO.	REMARKS
22	EXTRACTING TOOL FOR FUEL INJECTION VALVE (A) 燃料噴射弁抜出用具	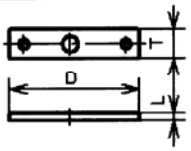 SIZE (mm) L: 19 D: 195 T: 44 MASS: 1.10 kg	SS400 SPCC S45C	1 1 (2)		15063392290 22137120000 26706120002	 M12 WASHER M12 NUT USE No.18
23	SETTING AND EXTRACTING TOOL FOR SUCTION AND EXHAUST VALVE SPRING 給排気弁ﾊﾞﾈ着脱用具	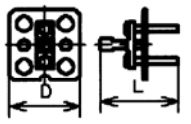 SIZE (mm) L:184.3 D: 165 T: - MASS: 2.26 kg	SS400 S45C S45C	1 1 1 (2)		15063392321 15063392330 15063392351 14667392320	 TOOL A M16x70 BOLT TOOL B USE No.21
24	EXTRACTING TOOL FOR MAIN BEARING CAP 主軸受ｷｬｯﾌﾟ抜出用具	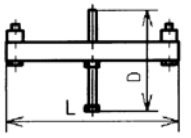 SIZE (mm) L: 330 D: 163 T: - MASS: 2.75 kg	SS400 S45C S45C	1 2 1 (2)		15063392100 26206100652 26206121554 26706120002	 M10x65 BOLT M12x155 BOLT M12 NUT USE No.18
25	DISASSEMBLY TOOL FOR MAIN BEARING CAP 主軸受ｷｬｯﾌﾟ分解用具	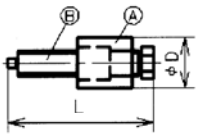 SIZE (mm) L: 160 D: 60 T: - MASS: 1.41 kg	SS400 S45C	2 2		15063392110 14667392120	TOOL A TOOL B
26	SETTING AND EXTRACTING PIN FOR UPPER MAIN BEARING 主軸受上部ﾒﾀﾙ着脱ﾋﾟﾝ	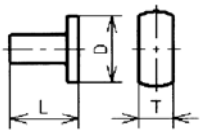 SIZE (mm) L:44.6 D: 50 T:16.5 MASS: 0.09 kg	S40C	1		15360492970	PIN
27	SETTING TOOL FOR UPPER MAIN BEARING 主軸受上部ﾒﾀﾙ挿入用具	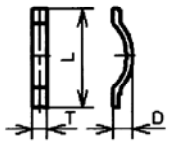 SIZE (mm) L: 255 D: 50 T: 38 MASS: 1.3 kg	SS400	1		15063392950	
28	EXTRACTING TOOL FOR CYLINDER LINER (A) ｼﾘﾝﾀﾞﾗｲﾅ抜出用具 (A)	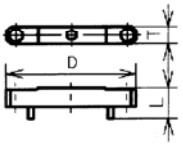 SIZE (mm) L: 150 D:430.5 T: 60 MASS: 10.8 kg	SS400	1		15063392010	REMOVER (LINER UPPER
29	EXTRACTING TOOL FOR CYLINDER LINER(B) ｼﾘﾝﾀﾞﾗｲﾅ抜出用具 (B)	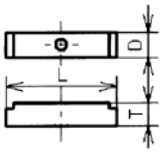 SIZE (mm) L: 248 D: 55 T: 55 MASS: 5.2 kg	SS400	1		15062392020	REMOVER (LINER LOWER

MFR'S NAME & ADDRESS	YANMAR CO.,LTD. HIGASHI-DORI NAGASU. AMAGASAKI.JAPAN.

2013.10.31

TOOLS	750633-92054	PAGE	5/7
		SHIP NO.	
		BOX NO.	

MODEL : EY22 DIESEL ENGINE

No	NAME	SKETCH	MATERIAL	SUPPLY PER SHIP WORKING	SUPPLY PER SHIP SPARE	PART NO.	REMARKS
30	EXTRACTING TOOL FOR CYLINDER LINER (C) ｼﾘﾝﾀﾞﾗｲﾅ抜出用具 (C)	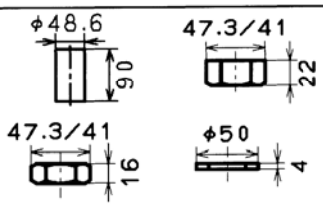 MASS: 0.71 kg	SGP S40C S40C SPCC	2 2 1 1		15063392040 26732270002 26772270002 22137270000	DISTANCE PIECE M27 NUT M27 NUT M27 WASHER
31	T HANDLE FOR INDICATOR COCK ｲﾝｼﾞｹｰﾀｺｯｸ用 T ﾊﾝﾄﾞﾙ	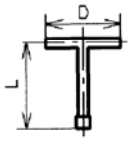 SIZE (mm) L: 150 D: 120 T: - MASS: 0.22 kg	SS400	1		15360592360	
32	SOCKET FOR TIGHTENING OF FUEL INJECTION VALVE 燃料噴射弁取付用 ｿｹｯﾄ	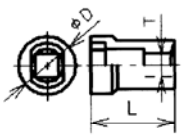 SIZE (mm) L: 70 D: 48 T:19.1 MASS: 0.5 kg	SCM435	1		14667392260	
33	SINGLE ENDED SPANNER 片口ｽﾊﾟﾅ 24	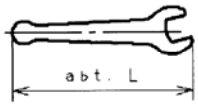 SIZE (mm) L: 216 D: - T: - MASS: 0.25 kg	S45C	1		13860392510	
34	DISASSEMBLY AND REASSEMBLY BOX SPANNER FOR FUEL INJECTION PUMP (A) 燃料噴射ﾎﾟﾝﾌﾟ分解組立用ﾎﾞｯｸｽｽﾊﾟﾅA	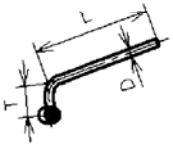 SIZE (mm) L: 530 D: 14 T: 53 MASS: 0.76 kg	SCM435 S45C	1		15063392560	
35	DISASSEMBLY AND REASSEMBLY BOX SPANNER FOR FUEL INJECTION PUMP (B) 燃料噴射ﾎﾟﾝﾌﾟ分解組立用ﾎﾞｯｸｽｽﾊﾟﾅB	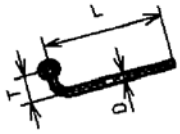 SIZE (mm) L: 530 D: 14 T: 53 MASS: 0.76 kg	SCM435 S45C	1		15063392570	
36	LAPPING TOOL FOR SUCTION AND EXHAUST VALVE 15063392700(仕組) 給排気弁摺合せ用具	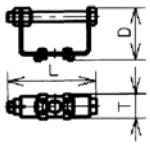 SIZE (mm) L: 140 D: 84 T: 44 MASS: 0.5 kg	SS400 SPCC S45C SPCC S25C S40C S25C	2 1 4 4 1 1 1		15063392710 14667392720 26116060102 22137060000 26111161302 26712160002 26751160002	STOPPER BODY M6x10 BOLT M6 WASHER M16x130 BOLT M16 NUT M16 NUT

MFR'S NAME & ADDRESS	YANMAR CO., LTD. HIGASHI-DORI NAGASU, AMAGASAKI, JAPAN.

TOOLS	750633-92054	PAGE	6/7
MODEL : EY22 DIESEL ENGINE		SHIP NO.	
		BOX NO.	

No	NAME	SKETCH	MATERIAL	SUPPLY PER SHIP WORK-ING	SUPPLY PER SHIP SPARE	PART NO.	REMARKS
37	POWDER FOR LAPPING TOOL 摺合せ用具用ﾊﾟｳﾀﾞｰ	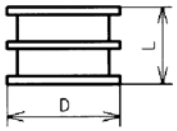 SIZE (mm) L: 26 D: 58 T: - MASS: 0.070 kg	PURCHASE	1		28210000070	
38	SINGLE ENDED SPANNER FOR ADJUSTING OF FUEL INJECTION VALVE 燃料噴射弁開弁圧調整用 片口ｽﾊﾟﾅ 41	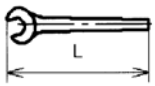 SIZE (mm) L: 360 D: - T: - MASS: 0.85 kg	PURCHASE	1		14667392270	
39	EXTRACTING TOOL FOR PROTECTION RING ﾌﾟﾛﾃｸｼｮﾝﾘﾝｸﾞ抜出用具	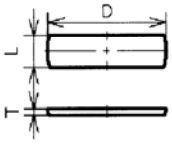 SIZE (mm) L: 50 D: 220 T: 9 MASS: 0.8 kg	SS400	1		15063392200	
40	EXTENSION BAR FOR SOCKET WRENCH ｿｹｯﾄﾚﾝﾁ用ｴｸｽﾃﾝｼｮﾝﾊﾞｰ	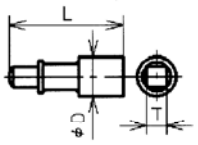 SIZE (mm) L: 200 D: 37 T:19.1 MASS: 0.8 kg	PURCHASE	1		42112002930	
41	EXTRACTING TOOL FOR CYLINDER LINER ｼﾘﾝﾀﾞﾗｲﾅ抜出用具	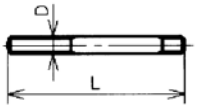 SIZE (mm) L: 850 D: M27 T: - MASS: 3.6 kg	SS400	1		15063392030	REMOVER BOLT
42	TORQUE WRENCH FOR FUEL INJECTION VALVE 燃料噴射弁用ﾄﾙｸﾚﾝﾁ	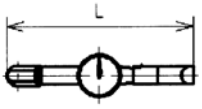 SIZE (mm) L: 332 D: - T: - MASS: 0.6 kg	PURCHASE	1		15263392253	
43	EXTENSION BAR FOR FUEL INJECTION VALVE 燃料噴射弁用ｴｸｽﾃﾝｼｮﾝﾊﾞｰ	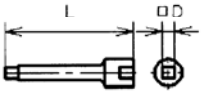 SIZE (mm) L: 150 D: 9.5 T: - MASS: 0.4 kg	PURCHASE	1		14667392790	
44	SOCKET FOR FUEL INJECTION VALVE 燃料噴射弁用ｿｹｯﾄ 17	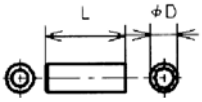 SIZE (mm) L: 27 D:23.1 T: - MASS: 0.1 kg	PURCHASE	1		14261392740	

MFR 'S NAME & ADDRESS	YANMAR CO., LTD. HIGASHI-DORI NAGASU, AMAGASAKI, JAPAN.

TOOLS	750633-92054, 750633-92150, 42112-002450	PAGE	7/7
MODEL : EY22 DIESEL ENGINE		SHIP NO.	
		BOX NO.	

No	NAME	SKETCH	MATERIAL	SUPPLY PER SHIP WORKING	SUPPLY PER SHIP SPARE	PART NO.	REMARKS
45	CLEANING BRUSH FOR FUEL INJECTION VALVE 燃料噴射弁用清掃用具	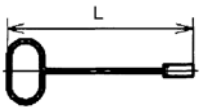 SIZE (mm) L: 600 D: - T: - MASS: 0.2 kg	PURCHASE	1		14667392810	
46	EXTRACTING TOOL FOR FUEL INJECTION VALVE DISTANCE PIECE 15063392400(仕組) 燃料噴射弁スリーブ間座用抜出用具	 SIZE (mm) L: 528 D: - T: - MASS: 0.65 kg	S45C S45C STPG370 S45C S40C SCM435	1 1 1 1 1 1		14667492760 15063392410 14667492770 15063392420 26732160002 26450080302	TOOL A TOOL B TOOL C TOOL D M16 NUT M8x30 BOLT
47	OIL PAN FOR LUB. OIL FILTER 潤滑油こし器分解用受け皿	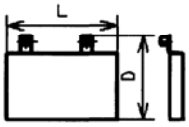 SIZE (mm) L: 220 D: 167 T: - MASS: 0.3 kg	SPCC S45C	1 2		15063392360 26206080202	 M8x20 BOLT
		SIZE (mm) L: D: T: MASS: kg					
		SIZE (mm) L: D: T: MASS: kg					
		SIZE (mm) L: D: T: MASS: kg					
		SIZE (mm) L: D: T: MASS: kg					
	TOOL BOX 用具箱	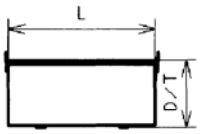 SIZE (mm) L: 1200 D: 400 T: 300 MASS: 41 kg	PURCHASE	1		42112002450	

MFR 'S NAME & ADDRESS	YANMAR CO., LTD. HIGASHI-DORI NAGASU, AMAGASAKI, JAPAN.

SPECIAL TOOLS	PAGE	1
MODEL 6EY22ALW DIESEL ENGINE (3) ENGS.	SHIP NO.	DE014
	BOX NO.	

No	NAME	SKETCH	MATERIAL	SUPPLY PER SHIP WORK-ING	SUPPLY PER SHIP SPARE	PART NO.	REMARKS
1	ATTACHMENT FOR INSIDE MICROME-TER ｼﾘﾝﾀﾞﾗｲﾅ ﾅｲｹｲ ｹｲｿｸｲﾁ ｼﾞﾖｳｸﾞ	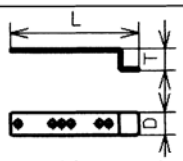 SIZE (mm) L:490 D:30 T:32.3 MASS: 0.27 kg	SPCC	1		15063392250..3	
2	INSIDE MICROME-TER ｲﾝｻｲﾄﾞﾏｲｸﾛﾒｰﾀ	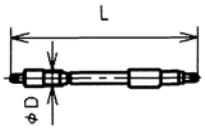 SIZE (mm) L:225 D:19 T:- MASS: 1.4 kg	PURCHA-SE	1		42111004440..3	
3	NOZZLE TESTER ASSY. ﾉｽﾞﾙﾃｽﾀｼｸﾐ	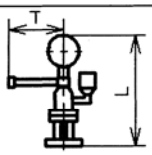 SIZE (mm) L:430 D:- T:260 MASS: 8.0 kg	STS410 S40C (ASSY.)	1 SET		74662193110	
4	SETTING TOOL FOR STEM SEAL ｽﾃﾑｼｰﾙｿｳﾆｭｳﾖｳｸﾞ	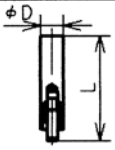 SIZE (mm) L:143 D:36 T: MASS: 0.86 kg	S45C S25C	1		15063392050..3	
5	INDICATOR (TYPE 25MPA) ｻｲｺｳｼｱﾂｷ (25MPA)	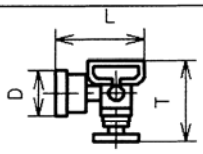 SIZE (mm) L:120 D:71.2 T:133 MASS: 1.0 kg	PURCHA-SE	1		14767393753..3	
6	DEFLECTION GAUGE ﾃﾞﾌﾚｸｼｮﾝｹﾞｰｼﾞ	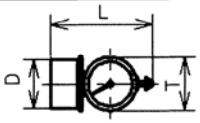 SIZE (mm) L:119 D:32 T:37 MASS: 0.375 kg	PURCHA-SE	1		42111002520..3	
7	MIRROR FOR DEF-LECTION GAUGE ﾃﾞﾌﾚｸｼｮﾝｹﾞｰｼﾞﾖｳﾐﾗｰ	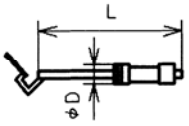 SIZE (mm) L:594 D:36.5 T:- MASS: 0.3 kg	PURCHA-SE	1		42111001421..3	
8	BLOWER CLEANING TOOL FOR TURBOCHARGER ﾌﾞﾛﾜｾﾝｼﾞｮｳｿｳﾁ	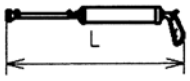 SIZE (mm) L:1140 D: T: MASS: 1.5 kg	ASSY.	1		15360292900..3	

MFR'S NAME & ADDRESS	YANMAR CO., LTD. HIGASHI-DORI NAGASU, AMAGASAKI, JAPAN.

W. NO. R3B18601 6EY22ALW 担当.. ﾓﾘｶﾜ 2013. 10. 03

SPECIAL TOOLS	PAGE	2
MODEL 6EY22ALW DIESEL ENGINE (3) ENGS.	SHIP NO.	DE014
	BOX NO.	

No	NAME	SKETCH	MATERIAL	SUPPLY PER SHIP WORKING	SUPPLY PER SHIP SPARE	PART NO.	REMARKS
9	HEXAGON WRENCH KEY FOR AIR STARTER エアスタータヨウ ロツカクボウスパナ	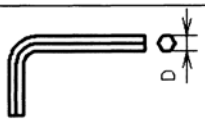 SIZE (mm) L:- D:- T:- MASS: 0.5 kg	ASSY. D:2.4 D:3.2 D:4.7	1		14667392980..3	D:6.3 D:7.9 D:9.5 D:11.2 D:12.7
10	ETHYLENE GLYCOL エチレングリコール	 SIZE (mm) L:- D:- T:- MASS: 1.4 kg	PURCHA-SE	3		41650003380..3	FOR SEAL POT
11	WATER FEEDING UNIT FOR TURBINE CLEANING タービンセンジョウヨウ チュウスイソウチ	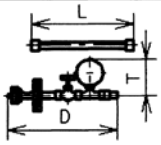 SIZE (mm) L:6000 D:265 T:143 MASS: 3.1 kg	CAC201 RUBBER (ASSY.)	1 SET		T000Q0043A0	WITH HOSE JOINT OF JIS F 7335, SIZE 15
		SIZE (mm) L: D: T: MASS: kg					
		SIZE (mm) L: D: T: MASS: kg					
		SIZE (mm) L: D: T: MASS: kg					
		SIZE (mm) L: D: T: MASS: kg					
		SIZE (mm) L: D: T: MASS: kg					

MFR'S NAME & ADDRESS	YANMAR CO., LTD. HIGASHI-DORI NAGASU, AMAGASAKI, JAPAN.

W. NO. R3B18601 6EY22ALW 担当.. モリカワ 2013. 10. 03

TOOLS	746673-92112	PAGE	1/2

MODEL : 6N18, 6·8N21, 6EY18, EY22 DIESEL ENGINE
(FOR HYDRAULIC PUMP)

SHIP NO.	
BOX NO.	

No	NAME	SKETCH	MATERIAL	SUPPLY PER SHIP WORKING	SUPPLY PER SHIP SPARE	PART NO.	REMARKS
1	HYDRAULIC PUMP 油圧ﾎﾟﾝﾌﾟ	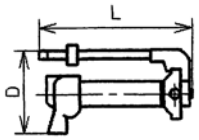 SIZE (mm) L: 590 D: 165 T: - MASS: 7 kg	PURCHASE	1		14667392200	
2	HOSE FOR HYDRAULIC PUMP 油圧ﾎﾟﾝﾌﾟ用ｺﾞﾑﾎｰｽ	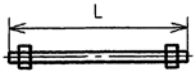 SIZE (mm) L:3000 D: - T: - MASS: 4.6 kg	PURCHASE	1		15362592760	
3	PRESSURE GAUGE 圧力計	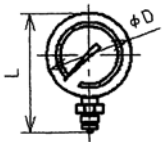 SIZE (mm) L: 147 D: 103 T: - MASS: 0.5 kg	PURCHASE	1		15362592801	
4	COUPLER ｵｽｶｯﾌﾟﾗｰ	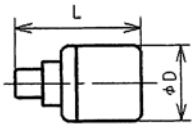 SIZE (mm) L: 48 D:28.5 T: - MASS: 0.12 kg	PURCHASE	4		15362592770	
5	GAUGE DUMPER ｹﾞｰｼﾞﾀﾞﾝﾊﾟｰ	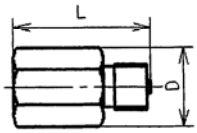 SIZE (mm) L: 54 D:33.5 T: - MASS: 0.4 kg	PURCHASE	1		15360592481	
6	JOINT FOR PRESSURE GAUGE 圧力計用取付金具	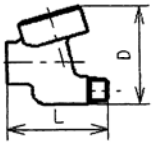 SIZE (mm) L: 71 D: 71 T: - MASS: 0.7 kg	PURCHASE	1		14667392210	
7	BRANCH ﾌﾞﾗﾝﾁ	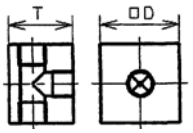 SIZE (mm) L: - D: 50 T: 40 MASS: 0.7 kg	S45C	1		14667392220	
8	ELBOW 角ｴﾙﾎﾞ	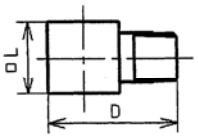 SIZE (mm) L: 28 D: 48 T: - MASS: 0.12 kg	PURCHASE	2		15160592740	

MFR'S NAME & ADDRESS	YANMAR CO., LTD. HIGASHI-DORI NAGASU, AMAGASAKI, JAPAN.

2006.3.20

TOOLS	746673-92112	PAGE	2/2
MODEL : 6N18, 6·8N21, 6EY18, EY22 DIESEL ENGINE (FOR HYDRAULIC PUMP)		SHIP NO.	
		BOX NO.	

No	NAME	SKETCH	MATERIAL	SUPPLY PER SHIP WORK-ING	SUPPLY PER SHIP SPARE	PART NO.	REMARKS
9	HOSE FOR HYDRAULIC PUMP 油圧ﾎﾟﾝﾌﾟ用ｺﾞﾑﾎｰｽ	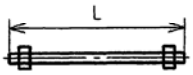 SIZE (mm) L:1000 D: - T: - MASS: 3.0 kg	PURCHASE	4		15362592750	
10	SEAL TAPE ｼｰﾙﾃｰﾌﾟ	 SIZE (mm) L: - D: - T: - MASS: - kg	PURCHASE	1		14667392190	

MFR'S NAME & ADDRESS	YANMAR CO., LTD. HIGASHI-DORI NAGASU, AMAGASAKI, JAPAN.

2006.3.20

TOOLS	750633-92130	PAGE	1/2
MODEL : 6EY22 DIESEL ENGINE (FOR HYDRAULIC JACK)		SHIP NO.	
		BOX NO.	

No	NAME	SKETCH	MATERIAL	SUPPLY PER SHIP WORK-ING	SUPPLY PER SHIP SPARE	PART NO.	REMARKS
1	HYDRAULIC JACK FOR CYLINDER HEAD BOLT, MAIN BEARING CAP BOLT ｼﾘﾝﾀﾞｰﾍｯﾄﾞﾎﾞﾙﾄ, 主軸受ｷｬｯﾌﾟﾎﾞﾙﾄ用 油圧ｼﾞｬｯｷ	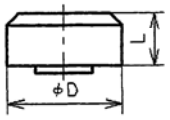 SIZE (mm) L: 57 D:149.4 T: - MASS: 5.9 kg	ASSY	4		15063392650	
2	COUPLER ﾒｽｶｯﾌﾟﾗｰ	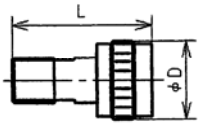 SIZE (mm) L: 59 D:30.5 T: - MASS: 0.12 kg	PURCHASE	4		15362592780	
3	TURNING HANDLE ﾀｰﾆﾝｸﾞﾊﾝﾄﾞﾙ	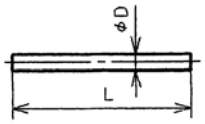 SIZE (mm) L: 100 D: 4.5 T: - MASS: 0.01 kg	SWP-B	1		14667392510	
4	DISTANCE PIECE FOR HYDRAULIC JACK, CYLINDER HEAD BOLT, MAIN BEARING CAP BOLT 油圧ｼﾞｬｯｷ用間座 (ｼﾘﾝﾀﾞｰﾍｯﾄﾞﾎﾞﾙﾄ, 主軸受ｷｬｯﾌﾟﾎﾞﾙﾄ)	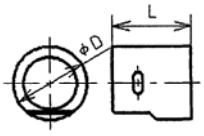 SIZE (mm) L: 105 D: 92 T: - MASS: 2.5 kg	S45C	4		15063392510	
5	DISTANCE PIECE BOLT FOR HYDRAULIC JACK, CONNECTING ROD BOLT 油圧ｼﾞｬｯｷ用間座ﾎﾞﾙﾄ (連接棒ﾎﾞﾙﾄ)	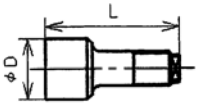 SIZE (mm) L: 250 D: 55 T: - MASS: 2.5 kg	SCM453	2		15063392530	
6	DISTANCE PIECE FOR HYDRAULIC JACK, CONNECTING ROD BOLT 油圧ｼﾞｬｯｷ用間座 (連接棒ﾎﾞﾙﾄ)	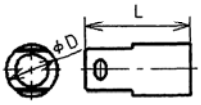 SIZE (mm) L: 180 D: 85 T: - MASS: 3.9 kg	S45C	2		15063392460	
7	DISTANCE PIECE BOLT FOR HYDRAULIC JACK, CONNECTING ROD BOLT 油圧ｼﾞｬｯｷ用間座ﾎﾞﾙﾄ (連接棒ﾎﾞﾙﾄ)	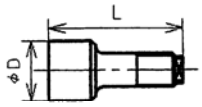 SIZE (mm) L: 161 D: 60 T: - MASS: 1.6 kg	SCM453	4		15063392680	
8	NUT FOR HYDRAULIC JACK 油圧ｼﾞｬｯｷ用ﾅｯﾄ	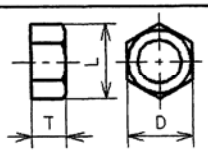 SIZE (mm) L:63.5 D: 55 T: 29 MASS: 0.7 kg	S40C	4		26732360002	
MFR'S NAME & ADDRESS	YANMAR CO., LTD. HIGASHI-DORI NAGASU, AMAGASAKI, JAPAN.						

2010.5.27

TOOLS	750633-92130	PAGE	2/2
MODEL : 6EY22 DIESEL ENGINE (FOR HYDRAULIC JACK)		SHIP NO.	
		BOX NO.	

No	NAME	SKETCH	MATERIAL	SUPPLY PER SHIP WORK-ING	SUPPLY PER SHIP SPARE	PART NO.	REMARKS
9	ELBOW 角ｴﾙﾎﾞ	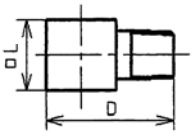 SIZE (mm) L: 28 D: 48 T: – MASS: 0.12 kg	PURCHASE	4		15160592740	
10	BOLT FOR SUPPORT OF DISTANCE PIECE 間座保持用ﾎﾞﾙﾄ	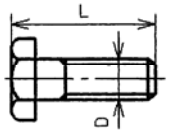 SIZE (mm) L:14.8 D: M4 T: – MASS: 0.01 kg	S45C	2		26116040122	
		SIZE (mm) L: D: T: – MASS: kg					
		SIZE (mm) L: D: T: – MASS: kg					
		SIZE (mm) L: D: T: – MASS: kg					
		SIZE (mm) L: D: T: – MASS: kg					
		SIZE (mm) L: D: T: – MASS: kg					
		SIZE (mm) L: D: T: – MASS: kg					

MFR'S NAME & ADDRESS	YANMAR CO., LTD. HIGASHI-DORI NAGASU, AMAGASAKI, JAPAN.

TOOLS	750633-92250	PAGE	1/1
MODEL : 6EY22 DIESEL ENGINE		SHIP NO.	
		BOX NO.	

No	NAME	SKETCH	MATERIAL	SUPPLY PER SHIP WORKING	SUPPLY PER SHIP SPARE	PART NO.	REMARKS
1	DISASSEMBLY AND REASSEMBLY TOOL FOR AIR COOLER (A) 空気冷却器用 分解組立用具(A)	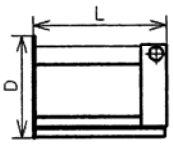 SIZE (mm) L: 735 D: 400 T: MASS: 9.2 kg	SS400 SS400 S45C	1 1 8		15063392800 15063392810 26206120402	 M12x40 BOLT
2	DISASSEMBLY AND REASSEMBLY TOOL FOR AIR COOLER (B) 空気冷却器用 分解組立用具(B)	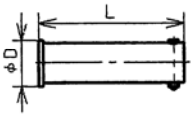 SIZE (mm) L: 606 D: 60 T: MASS: 3.4 kg	ASSY.	1		15063392820	
3	DISASSEMBLY AND REASSEMBLY TOOL FOR AIR COOLER (C) 空気冷却器用 分解組立用具(C)	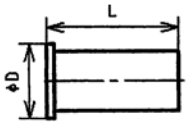 SIZE (mm) L: 606 D: 60 T: MASS: 3.4 kg	STPG370	1		15063392830	
4	DISASSEMBLY AND REASSEMBLY TOOL FOR AIR COOLER (D) 空気冷却器用 分解組立用具(D)	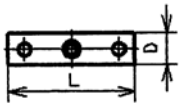 SIZE (mm) L: 120 D: 30 T: MASS: 0.8 kg	SS400 S45C	1 2		15063392840 26206100402	 M10x40 BOLT
5	DISASSEMBLY AND REASSEMBLY TOOL FOR AIR COOLER (E) 空気冷却器用 分解組立用具(E)	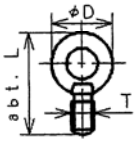 SIZE (mm) L: 73 D: 50 T: M12 MASS: 0.10 kg	SS400	1		26610120002	
6	DISASSEMBLY AND REASSEMBLY TOOL FOR AIR COOLER (F) 空気冷却器用 分解組立用具(F)	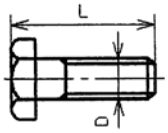 SIZE (mm) L: 118 D: 12 T: M12 MASS: 0.07 kg	S45C	2		26206121104	M12x110 BOLT

MFR'S NAME & ADDRESS	YANMAR CO., LTD. HIGASHI-DORI NAGASU, AMAGASAKI, JAPAN.

2011.3.3

ABB

排気ガスタービン過給機
Exhaust Gas Turbocharger

形式
Type A135-M

予備品＆分解工具
SPARE PARTS & TOOLS

当社工事番号
Work No.

機械番号
Machine No.

図番 No. HZTL446051 Mod. A
HZTL321562 Mod. C
HZTL452294 Mod. A

ターボ システムズ ユナイテッド 株式会社
過給機本体販売 4ストローク部 技術グループ
Application Engineering Group 4-Stroke Department New Turbocharger Business
Turbo Systems United Co., Ltd.

Kit 1 /97070 / ZS10	List of spare parts		
Type A135-M EXHAUST GAS TURBOCHARGER		Ship NO.	
A135-M 形排気ガスタービン過給機		Box NO.	

Pos.	Name	Sketch (weight) [kg]	Material	Quantity	Part no.	Remarks
1	Gasket パッキン	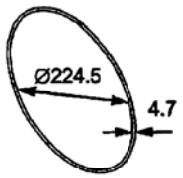		1	61002	
2	O-ring gasket Oリング	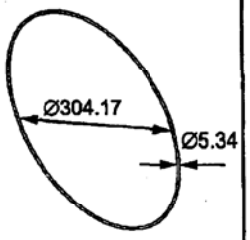		1	42012	
3	O-ring gasket Oリング	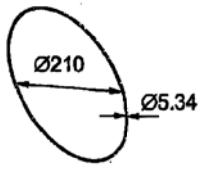		1	77005	
4	Cross recessed countersunk screw 十字穴付き皿小ネジ	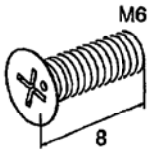		2	79041	
5	O-ring gasket Oリング	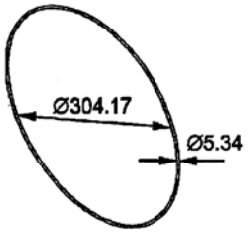		1	81010 82010	
	Total weight set of Spare parts ZS10	ca 0.6 kg				

ABB Turbo Systems Ltd

ABB

HZTL 446051R0001 Mod. A / 2009-11-11

90000	List of tools		
Type	A135-M EXHAUST GAS TURBOCHARGER A135-M 形排気ガスタービン過給機	Ship NO.	
		Box NO.	

No.	Name	Sketch (weight) [kg]	Material	Supply per 1 ship: Working	Supply per 1 ship: Spare	Drawing: No.	Drawing: Part no.	Remarks
1	Service support 支え板	(8.7) 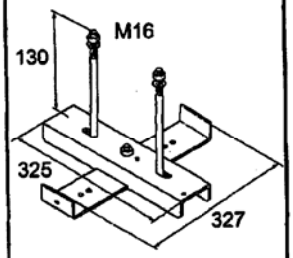		1			90012	
2	Insert 分解要具入れ 押上要具	(0.1) 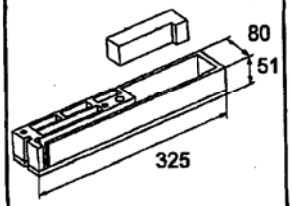		1			90013	
3	Press-off tool 引抜要具	(0.3) 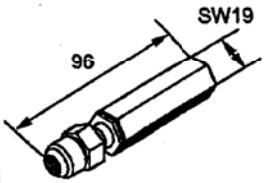		1			90042	
4	Extractor device	(0.1) 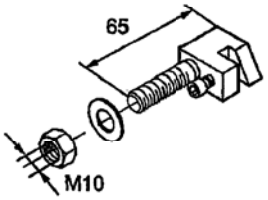		2			90070	

ABB Turbo Systems Ltd

ABB

90001	List of tools		
Type A135-M 形排気ガスタービン過給機		Ship NO.	
Type A135-M EXHAUST GAS TURBOCHARGER		Box NO.	

No.	Name	Sketch (weight / piece) [kg]	Quantity	Part no.	Remarks
1	Tool box 要具箱	(5.0) 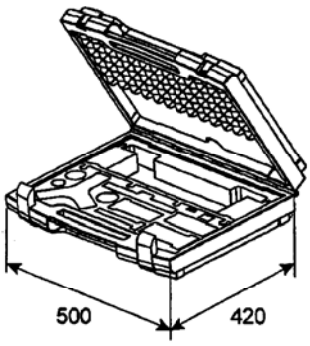	1	90056	
2	Tool Kit ZT1 分解要具 kit ZT1	(6.4) 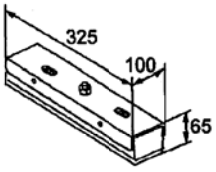	1	90000	
3	Pressing-on bush 押込ブッシュ	(1.1) 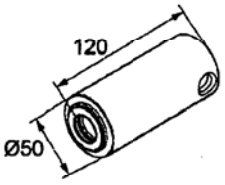	1	90380	
4	Compressor wheel key コンプレッサホイール キー	(0.2) 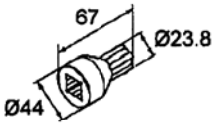	1	90245	
5	Pressure tool タービン押出要具	(2.0) 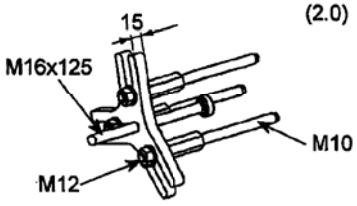	1	90661	

The representations in the diagrams can differ slightly from the actual parts supplied
The listed weights are rounded off
スケッチは実物と若干異なる場合があります。また、質量は概略値です。

ABB

HZTL452294R0001 Mod. A / 2013-05-07

SPARE PARTS

C3-00000-9180(1/1)

AUTOMATIC BACK-FLUSHING FILTER

MODEL : 6.46 DN65

NO.	NAME	SKETCH	MATERIAL	SUPPY PER JOB		DRAWING		REMARKS
				EQUIP	SPARE	NO.	POS.	
1	O-RING	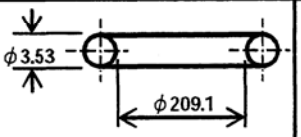	NBR	1	1	Z119094	60	3040016
2	O-RING	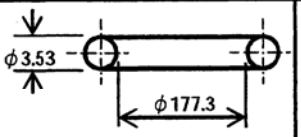	NBR	1	1	Z119094	61	3040111
3	O-RING	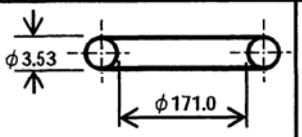	NBR	2	2	Z119094	62	3040015
4	O-RING	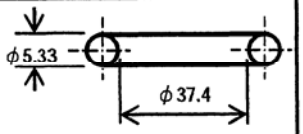	NBR	1	1	Z119094	66	3040115
5	FILTER CANDLE	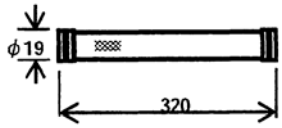	POLYESTER	32	1	Z119094	7	1360014 with POS#63
6	O-RING	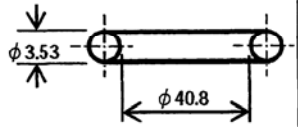	NBR	1	1	Z119094	71	3048235
7								

Bollfilter Japan Ltd.

Toroa Kobe Bldg. 7F, Hachiman-dori, Chuo-ku, Kobe 651-0085
Tel : +81-78-242-8550, Fax : +81-78-242-8515

H22.5.27

SPECIAL TOOL

C3-00000-9110(1/1)

AUTOMATIC BACK-FLUSHING FILTER

MODEL : 6.46 DN50, 65, 80, 100

NO.	NAME	SKETCH	MATERIAL	SUPPY PER JOB		DRAWING		IDENT. NO. UNIT WT(kg)
				WORK-ING	SPARE	NO.	POS.	
1	CANDLE EXTRACTOR	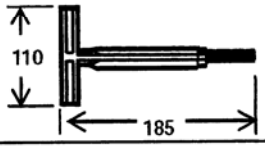	PLASTICS	1	-	-	-	9100008 (0.059)

Bollfilter Japan Ltd.

Toroa Kobe Bldg. 7F, Hachiman-dori, Chuo-ku, Kobe 651-0085

Tel : +81-78-242-8550, Fax : +81-78-242-8515

予備品 SPARE	形式 TYPE	VLG-4C:46130-061711 VLG-5C:46130-061720	図番 DRAWING. No.	TS-9736Y2	頁 PAGE	
潤滑油プライミングモーターポンプ予備品 SPARE PARTS FOR LO PRIMING PUMP					工番 WORK No.	
					箱番 BOX No.	

No.	名称 NAME	略図 SKETCH	材質 MATERIAL	供給数量 SUPPLY 常備 WORKING 一台分 PER PUMP	予備 SPARE 一工分 PER WORK	図番 DRAWING No. No.	PART No.	記事 REMARKS MASS
1	オイルシール OIL SEAL	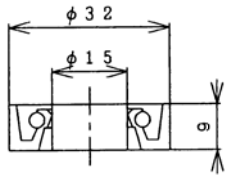	ニトリル NBR	2	2	TS-9736S TS-9735S	515	(0.02kg)
2	逃し弁ばね SPRING	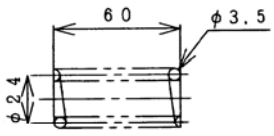 Na=7.5	SWPA PIANO WIRE	1	1	〃	707	(0.05kg)
3	Oリング O-RING	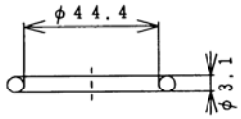	ニトリル NBR	1	1	〃	714	(0.01kg)
4	ガスケット GASKET	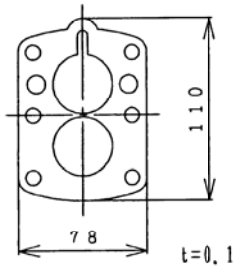 t=0.1	紙 PAPER	1	1	〃	900	(0.01kg)
5	ガスケット GASKET	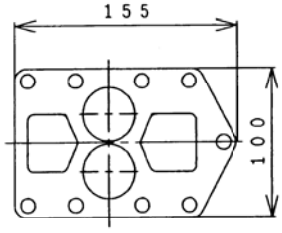 t=0.1	紙 PAPER	1	1	〃	970	(0.01kg)

製造所名 及 住所 MAKER & ADDRESS	大晃機械工業株式会社 山口県熊毛郡田布施町下田布施209－1番地 TAIKO KIKAI INDUSTRIES CO., LTD. 209-1 Shimotabuse Tabuse-Cho Kumage-Gun Yamaguchi-Pref. JAPAN

(O. No.)

TOTAL MASS:0.12kg

予備品 SPARE	形式 TYPE	VLG-4C:46130-061711 VLG-5C:46130-061720	図番 DRAWING. No.	TS-9736Y2	頁 PAGE	
潤滑油プライミングモーターポンプ予備品 SPARE PARTS FOR LO PRIMING PUMP					工番 WORK No.	
					箱番 BOX No.	

No.	名称 NAME	略図 SKETCH	材質 MATERIAL	供給数量 SUPPLY 常備 WORKING 一台分 PER PUMP	予備 SPARE 一工分 PER WORK	図番 DRAWING No. No.	PART No.	記事 REMARKS MASS
1	ボールベアリング BALL BEARING	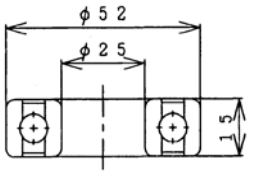	SUJ2 BEARING STEEL	2	2	—	—	電動機用軸受 6205ZZ (連結側, 連結反対側) (0.13kg)

製造所名 及 住所 MAKER & ADDRESS	大晃機械工業株式会社 山口県熊毛郡田布施町下田布施209－1番地 TAIKO KIKAI INDUSTRIES CO., LTD. 209-1 Shimotabuse Tabuse-Cho Kumage-Gun Yamaguchi-Pref. JAPAN

8778-VLG-4C-Y2A

(O. No.)

TOTAL MASS:0.26kg